SuperServer®
1029P-MT
1029P-MTR

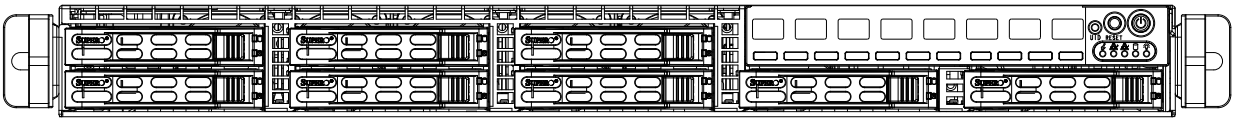

USER'S MANUAL

Revision 1.0b

WIT Company – поставка серверов, СХД, сетевого оборудования, лицензионного ПО WIT.RU

The information in this User's Manual has been carefully reviewed and is believed to be accurate. The vendor assumes no responsibility for any inaccuracies that may be contained in this document, and makes no commitment to update or to keep current the information in this manual, or to notify any person or organization of the updates. **Please Note: For the most up-to-date version of this manual, please see our website at www.supermicro.com.**

Super Micro Computer, Inc. ("Supermicro") reserves the right to make changes to the product described in this manual at any time and without notice. This product, including software and documentation, is the property of Supermicro and/or its licensors, and is supplied only under a license. Any use or reproduction of this product is not allowed, except as expressly permitted by the terms of said license.

IN NO EVENT WILL Super Micro Computer, Inc. BE LIABLE FOR DIRECT, INDIRECT, SPECIAL, INCIDENTAL, SPECULATIVE OR CONSEQUENTIAL DAMAGES ARISING FROM THE USE OR INABILITY TO USE THIS PRODUCT OR DOCUMENTATION, EVEN IF ADVISED OF THE POSSIBILITY OF SUCH DAMAGES. IN PARTICULAR, SUPER MICRO COMPUTER, INC. SHALL NOT HAVE LIABILITY FOR ANY HARDWARE, SOFTWARE, OR DATA STORED OR USED WITH THE PRODUCT, INCLUDING THE COSTS OF REPAIRING, REPLACING, INTEGRATING, INSTALLING OR RECOVERING SUCH HARDWARE, SOFTWARE, OR DATA.

Any disputes arising between manufacturer and customer shall be governed by the laws of Santa Clara County in the State of California, USA. The State of California, County of Santa Clara shall be the exclusive venue for the resolution of any such disputes. Supermicro's total liability for all claims will not exceed the price paid for the hardware product.

FCC Statement: This equipment has been tested and found to comply with the limits for a Class A digital device pursuant to Part 15 of the FCC Rules. These limits are designed to provide reasonable protection against harmful interference when the equipment is operated in a commercial environment. This equipment generates, uses, and can radiate radio frequency energy and, if not installed and used in accordance with the manufacturer's instruction manual, may cause harmful interference with radio communications. Operation of this equipment in a residential area is likely to cause harmful interference, in which case you will be required to correct the interference at your own expense.

California Best Management Practices Regulations for Perchlorate Materials: This Perchlorate warning applies only to products containing CR (Manganese Dioxide) Lithium coin cells. "Perchlorate Material-special handling may apply. See www.dtsc.ca.gov/hazardouswaste/perchlorate".

WARNING: This product can expose you to chemicals including lead, known to the State of California to cause cancer and birth defects or other reproductive harm. For more information, go to www.P65Warnings.ca.gov.

The products sold by Supermicro are not intended for and will not be used in life support systems, medical equipment, nuclear facilities or systems, aircraft, aircraft devices, aircraft/emergency communication devices or other critical systems whose failure to perform be reasonably expected to result in significant injury or loss of life or catastrophic property damage. Accordingly, Supermicro disclaims any and all liability, and should buyer use or sell such products for use in such ultra-hazardous applications, it does so entirely at its own risk. Furthermore, buyer agrees to fully indemnify, defend and hold Supermicro harmless for and against any and all claims, demands, actions, litigation, and proceedings of any kind arising out of or related to such ultra-hazardous use or sale.

Manual Revision 1.0b

Release Date: March 25, 2019

Unless you request and receive written permission from Super Micro Computer, Inc., you may not copy any part of this document. Information in this document is subject to change without notice. Other products and companies referred to herein are trademarks or registered trademarks of their respective companies or mark holders.

Copyright © 2018 by Super Micro Computer, Inc.
All rights reserved.
Printed in the United States of America

WIT Company – поставка серверов, СХД, сетевого оборудования, лицензионного ПО WIT.RU

Preface

About this Manual

This manual is written for professional system integrators and PC technicians. It provides information for the installation and use of the SuperServer 1029P-MT/MTR. Installation and maintenance should be performed by experienced technicians only.

Please refer to the 1029P-MT/MTR server specifications page on our website for updates on supported memory, processors and operating systems (http://www.supermicro.com).

Notes

For your system to work properly, please follow the links below to download all necessary drivers/utilities and the user's manual for your server.

- Supermicro product manuals: http://www.supermicro.com/support/manuals/
- Product drivers and utilities: https://www.supermicro.com/wftp/driver
- Product safety info: http://www.supermicro.com/about/policies/safety_information.cfm

If you have any questions, please contact our support team at:
support@supermicro.com

This manual may be periodically updated without notice. Please check the Supermicro website for possible updates to the manual revision level.

Warnings

Special attention should be given to the following symbols used in this manual.

Warning! Indicates important information given to prevent equipment/property damage or personal injury.

Warning! Indicates high voltage may be encountered when performing a procedure.

WIT Company – поставка серверов, СХД, сетевого оборудования, лицензионного ПО WIT.RU

Contents

Chapter 1 Introduction

1.1 Overview....8
1.2 Unpacking the System....8
1.3 System Features....9
1.4 Server Chassis Features....10
Control Panel....10
Front Features....11
Rear Features....12
1.5 Motherboard Layout....13
Quick Reference Table....14

Chapter 2 Server Installation

2.1 Overview....16
2.2 Preparing for Setup....16
Choosing a Setup Location....16
Rack Precautions....16
Server Precautions....17
Rack Mounting Considerations....17
Ambient Operating Temperature....17
Airflow....17
Mechanical Loading....17
Circuit Overloading....18
Reliable Ground....18
2.3 Installing the Rails....19
Identifying the Rails....19
Inner Rails....20
Outer Rails....21
Installing the Chassis into a Rack....21
2.4 Installing the Server into a Rack....22
Installing the Server into a Telco Rack....23

Chapter 3 Maintenance and Component Installation

3.1 Removing Power....24
3.2 Accessing the System....24
3.3 Motherboard Components....25

WIT Company – поставка серверов, СХД, сетевого оборудования, лицензионного ПО WIT.RU

Processor and Heatsink Installation....25
The Xeon Scalable Processor....26
Assembling the Processor Package....26
Removing the Dust Cover from the CPU Socket....29
Installing the Processor Heatsink Module (PHM) 30
Removing the Processor Heatsink Module from the Motherboard....31
Memory Installation....32
Memory Support....32
Memory Population Guidelines....33
Memory Population Sequence....33
Installing Memory....34
PCI Expansion Card Installation....36
Motherboard Battery....36
3.4 Chassis Components....37
Hard Drives....37
Hard Drive Carrier Indicators....38
System Cooling....39
Installing Fans....39
Air Shroud....40
Power Supply....41
1029P-MT....41
Power Supply Failure....41
1029P-MTR....41
Power Supply Failure....42
Chapter 4 Motherboard Connections
4.1 Power Connections....43
4.2 Headers and Connectors....44
Control Panel....46
4.3 Ports....49
Rear I/O Ports....49
Ethernet Ports....49
4.4 Jumpers....50
Explanation of Jumpers....50
4.5 LED Indicators....52

WIT Company – поставка серверов, СХД, сетевого оборудования, лицензионного ПО WIT.RU

Chapter 5 Software

5.1 OS Installation 53

Installing the Windows OS for a RAID System 53

Installing Windows to a Non-RAID System 53

5.2 Driver Installation.....54

5.3 SuperDoctor® 5.....55

5.4 IPMI 56

Chapter 6 BIOS

6.1 Introduction.....57

6.2 Main Setup 58

6.3 Advanced Setup Configurations.....60

6.4 Event Logs 87

6.5 IPMI 89

6.6 Security 92

6.7 Boot 95

6.8 Save & Exit 97

Appendix A BIOS Error Codes

Appendix B Standardized Warning Statements for AC Systems

Appendix C System Specifications

WIT Company – поставка серверов, СХД, сетевого оборудования, лицензионного ПО WIT.RU

Contacting Supermicro

Headquarters

Address:	Super Micro Computer, Inc. 980 Rock Ave. San Jose, CA 95131 U.S.A.
Tel:	+1 (408) 503-8000
Fax:	+1 (408) 503-8008
Email:	marketing@supermicro.com (General Information) support@supermicro.com (Technical Support)
Website:	www.supermicro.com

Europe

Address:	Super Micro Computer B.V. Het Sterrenbeeld 28, 5215 ML 's-Hertogenbosch, The Netherlands
Tel:	+31 (0) 73-6400390
Fax:	+31 (0) 73-6416525
Email:	sales@supermicro.nl (General Information) support@supermicro.nl (Technical Support) rma@supermicro.nl (Customer Support)
Website:	www.supermicro.nl

Asia-Pacific

Address:	Super Micro Computer, Inc. 3F, No. 150, Jian 1st Rd. Zhonghe Dist., New Taipei City 235 Taiwan (R.O.C)
Tel:	+886-(2) 8226-3990
Fax:	+886-(2) 8226-3992
Email:	support@supermicro.com.tw
Website:	www.supermicro.com.tw

WIT Company – поставка серверов, СХД, сетевого оборудования, лицензионного ПО WIT.RU

Chapter 1

Introduction

1.1 Overview

This chapter provides a brief outline of the functions and features of the 1029P-MT/MTR SuperServer. The 1029P-MT/MTR is based on the X11DPL-i motherboard and the SC113MFTS-605CBP/R804CBP chassis.

In addition to the motherboard and chassis, several important parts that are included with the system are listed below.

Main Parts List		
Description	**Part Number**	**Quantity**
Air Shroud	MCP-310-19015-0N	1
Heatsink	SNK-P0067PD	2
Fans	FAN-0154L4	4
Riser Card	RSC-RR1U-E8	1
Hard Drive Carriers (hot-swap)	MCP-220-00047-0B	8
Hard Drive Backplane	BPN-SAS3-113A-N2	1
Outer rail (quick)	MCP-290-00102-0N	1 set
Inner Rail (front)	MCP-290-00107-0N	1 set
Inner Rail (extension)	MCP-290-00110-0N	1 set

1.2 Unpacking the System

Inspect the box the SuperServer 1029P-MT/MTR was shipped in and note if it was damaged in any way. If any equipment appears damaged, please file a damage claim with the carrier who delivered it.

Decide on a suitable location for the rack unit that will hold the server. It should be situated in a clean, dust-free area that is well ventilated. Avoid areas where heat, electrical noise and electromagnetic fields are generated. It will also require a grounded AC power outlet nearby. Be sure to read the precautions and considerations noted in Appendix B.

WIT Company – поставка серверов, СХД, сетевого оборудования, лицензионного ПО WIT.RU

1.3 System Features

The following table provides you with an overview of the main features of the 1029P-MT/MTR. Please refer to Appendix C for additional specifications.

System Features
Motherboard
X11DPL-i
Chassis
SC113MFTS-605CBP/R804CBP
CPU
Dual Intel Xeon 81xx/61xx/51xx/41xx/31xx series or 82xx/62xx/52xx/42xx/32xx series processors (support for CPUs with a TDP of 70-140W)
Socket Type
Socket P
Memory
Up to 2TB 3DS ECC RDIMM/LRDIMM to speeds of DDR4-2933MHz in 8 DIMM slots (82xx/62xx series processors) Up to 1TB 3DS ECC RDIMM/LRDIMM to speeds of DDR4-2666MHz, in 8 DIMM slots (81xx/61xx/51xx/41xx/31xx series processors)
Chipset
Intel C621 chipset
Expansion Slots (supported)
One PCI-Express 3.0 x8 slot (supported by CPU1)
Hard Drives
Eight 2.5" hot-swap hard drives
Power
1029P-MT: 600W single power supply (p/n PWS-605P-1H) 1029P-MTR: 800W redundant power supplies (p/n PWS-804P-1R)
Form Factor
1U rackmount
Dimensions
(WxHxD) 17.2 x 1.7 x 19.98 in. (437 x 43 x 508 mm)

WIT Company – поставка серверов, СХД, сетевого оборудования, лицензионного ПО WIT.RU

1.4 Server Chassis Features

Control Panel

The switches and LEDs located on the control panel are described below. See Chapter 4 for details on the control panel connections.

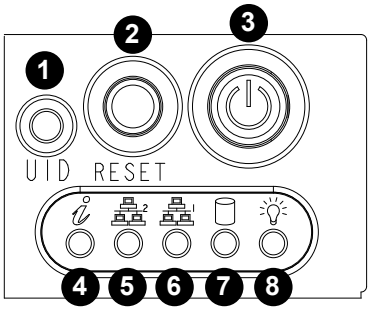

Figure 1-1. Control Panel View

Control Panel Features		
Item	**Feature**	**Description**
1	Universal ID LED	Indicates server location for easy system location in large stack configurations. Another UID is located on the rear of the chassis.
2	Reset Button	The reset button is used to reboot the system.
3	Power Button	The main power button is used to apply or remove power from the power supply to the server. Turning off system power with this button removes the main power but maintains standby power. To perform many maintenance tasks, you must also unplug system before servicing.
4	Information LED	See table below for details.
5	NIC2 LED	Indicates network activity on LAN port 2 when flashing.
6	NIC1 LED	Indicates network activity on LAN port 1 when flashing
7	HDD LED	Indicates activity on the hard drive when flashing.
8	Power LED	Indicates power is being supplied to the system's power supply unit. This LED should normally be illuminated when the system is operating.

Information LED	
Status	**Description**
Continuously on and red	An overheat condition has occurred. (This may be caused by cable congestion.)
Blinking red (1Hz)	Fan failure, check for an inoperative fan.
Solid blue	UID has been activated locally to locate the server in a rack environment.
Blinking blue	UID has been activated using IPMI to locate the server in a rack environment.

WIT Company – поставка серверов, СХД, сетевого оборудования, лицензионного ПО WIT.RU

Front Features

The SC113MFTS-605CBP/R804CBP is a mini 1U chassis See the illustration below for the features included on the front of the chassis.

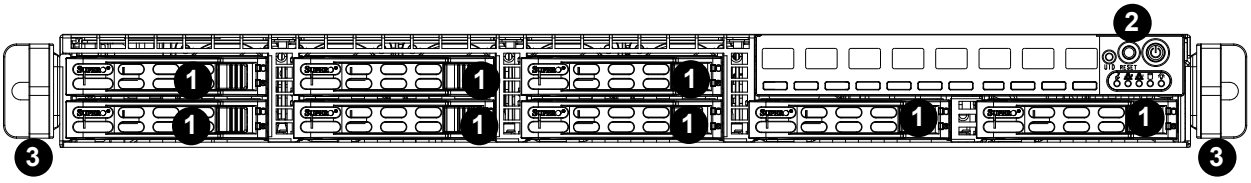

Figure 1-2. Chassis Front View

Front Chassis Features		
Item	**Feature**	**Description**
1	HDD	Hot-swap 2.5" SATA hard disk drive
2	Control Panel	Front control panel with LEDs and buttons (see preceding page)
3	Rack Ear Brackets	Attaches server chassis to the rack

WIT Company – поставка серверов, СХД, сетевого оборудования, лицензионного ПО WIT.RU

Rear Features

The illustration below shows the features included on the rear of the chassis.

1029P-MT

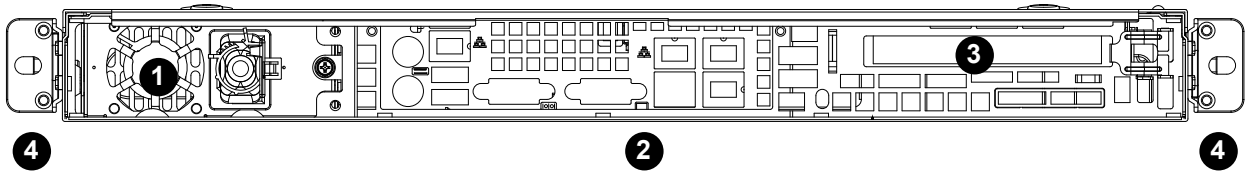

1029P-MTR

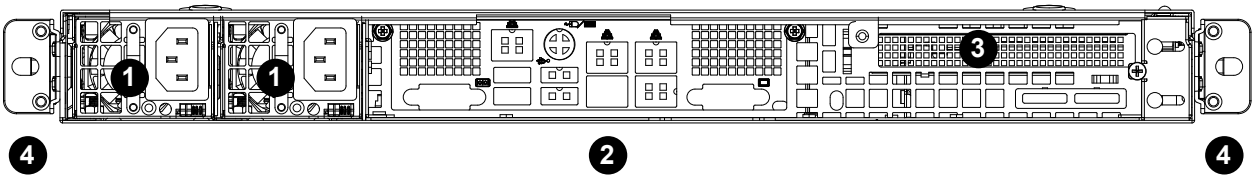

Figure 1-3. Chassis Rear View

Rear Chassis Features		
Item	**Feature**	**Description**
1	Power Supply	1029P-MT: 600W single power supply (p/n PWS-605P-1H) 1029P-MTR: 800W redundant power supplies (p/n PWS-804P-1R)
2	I/O Back Panel	Rear I/O ports (see Section 4.3)
3	Expansion Card Slot	Slot for one expansion card (requires pre-installed riser card)
4	Rack Ear Brackets	Attaches server chassis to the rack

WIT Company – поставка серверов, СХД, сетевого оборудования, лицензионного ПО WIT.RU

1.5 Motherboard Layout

Below is a layout of the X11DPL-i with jumper, connector and LED locations shown. See the table on the following page for descriptions. For detailed descriptions, pinout information and jumper settings, refer to Chapter 4.

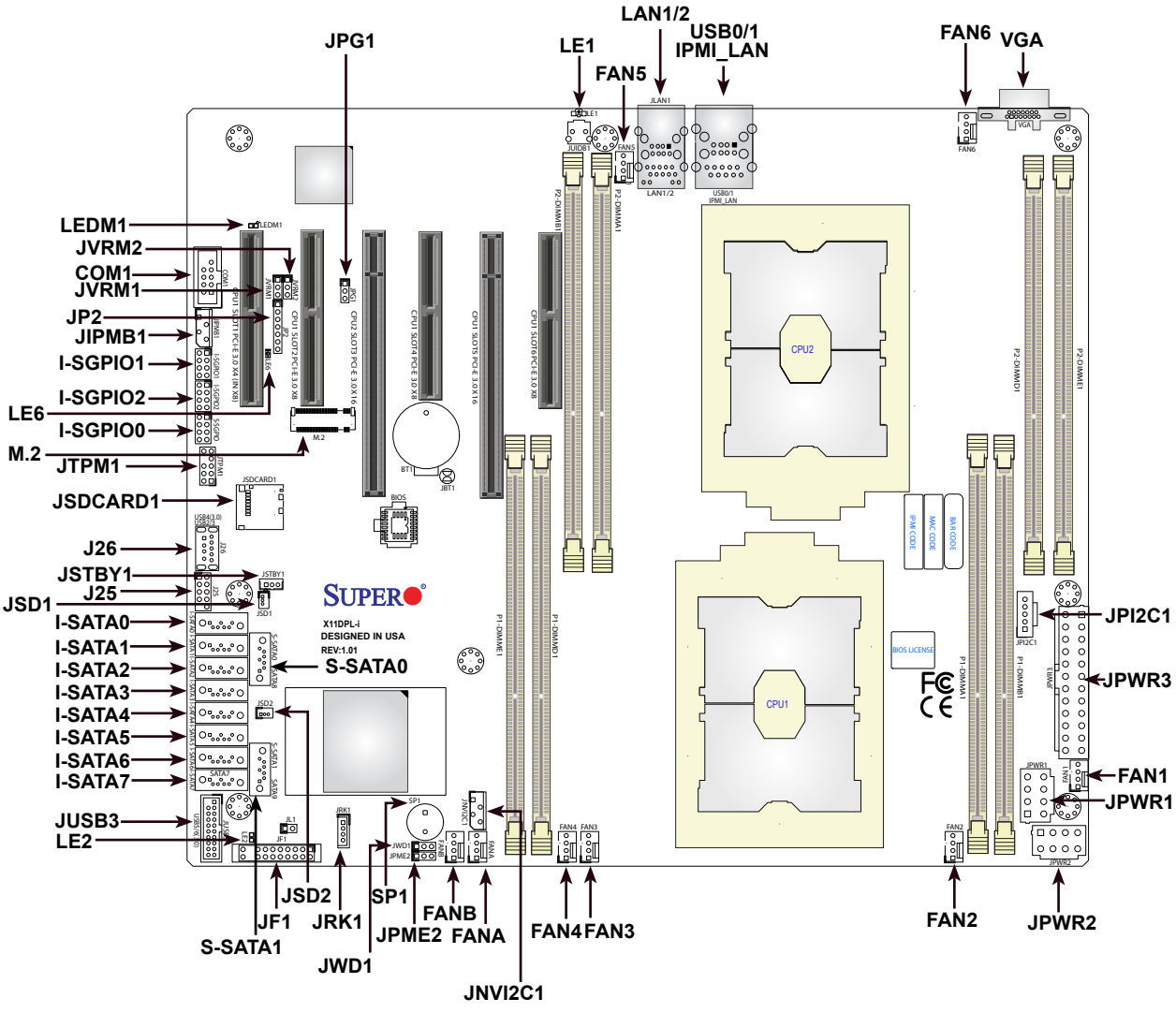

Figure 1-4. Motherboard Layout

Notes:

- "■" indicates the location of pin 1.
- Jumpers and LED indicators not indicated are used for internal testing only.

WIT Company – поставка серверов, СХД, сетевого оборудования, лицензионного ПО WIT.RU

Quick Reference Table

Jumper	Description	Default Setting
JBT1	Clear CMOS	Open (Normal)
JPG1	VGA Enable/Disable	Pins 1-2 (Enabled)
JPME2	Manufacturer (ME) Mode Select	Pins 1-2 (Normal)
JVRM1	VRM SMB Clock (to BMC or PCH)	Pins 1-2 (BMC, Normal)
JVRM2	VRM SMB Data (to BMC or PCH)	Pins 1-2 (BMC, Normal)
JWD1	Watch-Dog Timer	Pins 1-2 (Reset)

Connector	Description
Battery (BT1)	Onboard COMS battery
COM 1	Front Panel COM Port 1
FAN 1~6	System cooling fan headers
FANA/FANB	Thermal fan headers for I/O add-on cards
JF1	Front_Panel_Control Header
J25	USB 2.0 Header for USB Ports 2/3
J26	USB 3.0 Type A port for USB4
JPWR1/2	8-pin Power Connector
JPWR3	24-pin Power Connector
JPI2C1	Power Supply I²C Connector
JSD1/JSD2	Power connector for SATA DOM
JSTBY1	Wake On LAN Header
IPMI_LAN	Dedicated IPMI LAN port
JIPMB1	4-pin external BMC I²C header (for an IPMI card)
JNVI²C1	NVMe I²C headers
JRK1	RAID key for CPU NVMe SSD
JSDCARD1	Micro SD Card slot
JTPM1	Trusted Platform Module (TPM)/Port 80 connector
M.2	M.2 Slot
(I-)SATA0~3, 4~7	I-SATA 3.0 connectors supported by the Intel PCH
(S-)SATA0/1	S-SATA 3.0 connectors supported by the Intel PCH
SP1	Internal Speaker
USB0/1	Back panel USB 3.0 ports
VGA	VGA port

LED	Description	Status
LE1	UID (Unit Identifier) LED	Solid Blue: Unit Identified
LE6	Onboard Power LED	Solid Red: Standby Solid Green: Power On
LEDM1	BMC Heartbeat LED	Blinking Green: BMC Normal

WIT Company – поставка серверов, СХД, сетевого оборудования, лицензионного ПО WIT.RU

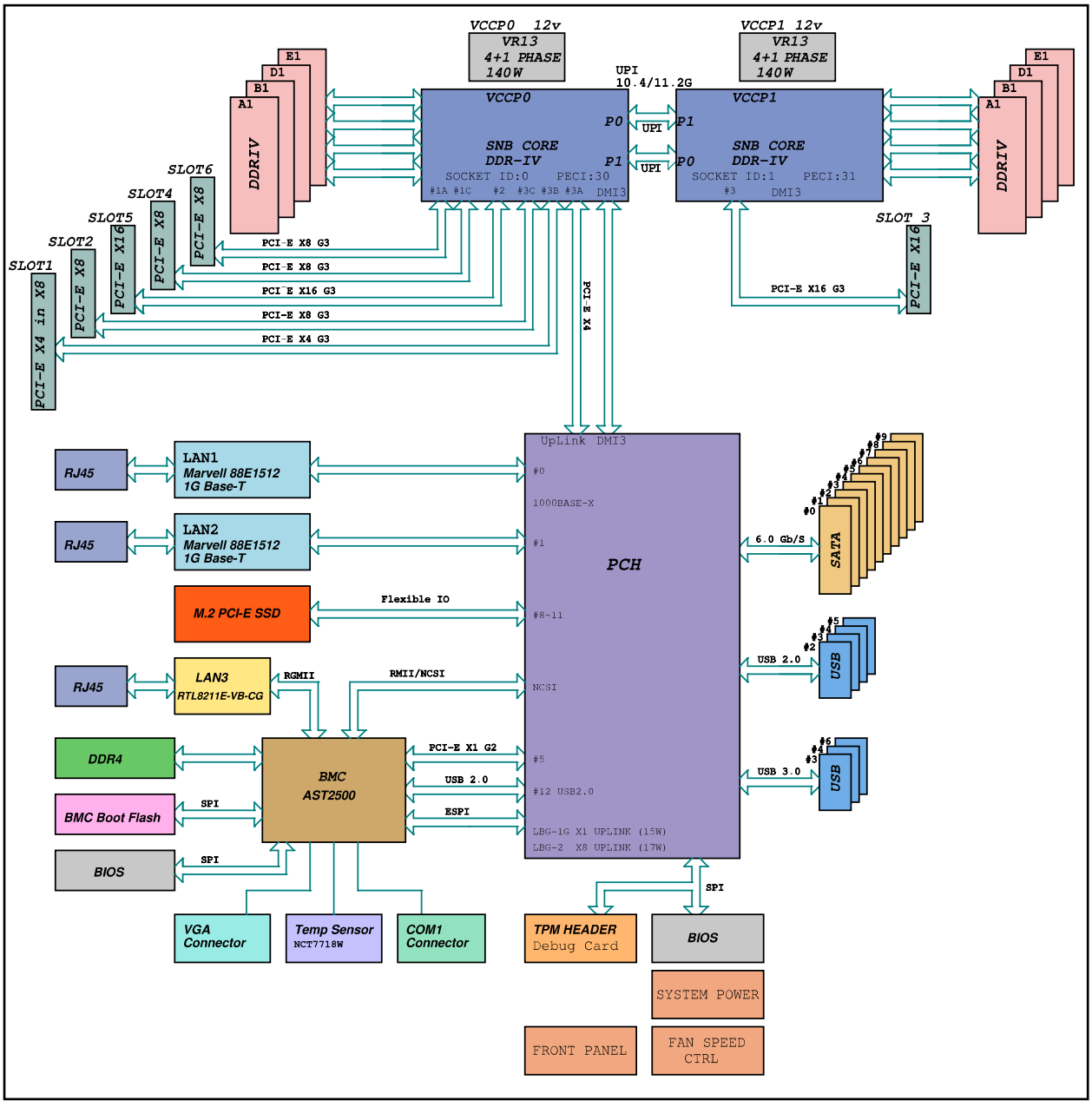

Figure 1-5. Intel C621 Chipset: System Block Diagram

Note: This is a general block diagram and may not exactly represent the features on your motherboard. See the System Specifications appendix for the actual specifications of your motherboard.

WIT Company – поставка серверов, СХД, сетевого оборудования, лицензионного ПО WIT.RU

Chapter 2

Server Installation

2.1 Overview

This chapter provides advice and instructions for mounting your system in a server rack. If your system is not already fully integrated with processors, system memory etc., refer to Chapter 4 for details on installing those specific components.

Caution: Electrostatic Discharge (ESD) can damage electronic components. To prevent such damage to PCBs (printed circuit boards), it is important to use a grounded wrist strap, handle all PCBs by their edges and keep them in anti-static bags when not in use.

2.2 Preparing for Setup

The box in which the system was shipped should include the rackmount hardware needed to install it into the rack. Please read this section in its entirety before you begin the installation.

Choosing a Setup Location

- The system should be situated in a clean, dust-free area that is well ventilated. Avoid areas where heat, electrical noise and electromagnetic fields are generated.
- Leave enough clearance in front of the rack so that you can open the front door completely (~25 inches) and approximately 30 inches of clearance in the back of the rack to allow sufficient space for airflow and access when servicing.
- This product should be installed only in a Restricted Access Location (dedicated equipment rooms, service closets, etc.).
- This product is not suitable for use with visual display workplace devices acccording to §2 of the German Ordinance for Work with Visual Display Units.

Rack Precautions

- Ensure that the leveling jacks on the bottom of the rack are extended to the floor so that the full weight of the rack rests on them.

WIT Company – поставка серверов, СХД, сетевого оборудования, лицензионного ПО WIT.RU

- In single rack installations, stabilizers should be attached to the rack. In multiple rack installations, the racks should be coupled together.
- Always make sure the rack is stable before extending a server or other component from the rack.
- You should extend only one server or component at a time - extending two or more simultaneously may cause the rack to become unstable.

Server Precautions

- Review the electrical and general safety precautions in Appendix B.
- Determine the placement of each component in the rack *before* you install the rails.
- Install the heaviest server components at the bottom of the rack first and then work your way up.
- Use a regulating uninterruptible power supply (UPS) to protect the server from power surges and voltage spikes and to keep your system operating in case of a power failure.
- Allow any drives and power supply modules to cool before touching them.
- When not servicing, always keep the front door of the rack and all covers/panels on the servers closed to maintain proper cooling.

Rack Mounting Considerations

Ambient Operating Temperature

If installed in a closed or multi-unit rack assembly, the ambient operating temperature of the rack environment may be greater than the room's ambient temperature. Therefore, consideration should be given to installing the equipment in an environment compatible with the manufacturer’s maximum rated ambient temperature (TMRA).

Airflow

Equipment should be mounted into a rack so that the amount of airflow required for safe operation is not compromised.

Mechanical Loading

Equipment should be mounted into a rack so that a hazardous condition does not arise due to uneven mechanical loading.

WIT Company – поставка серверов, СХД, сетевого оборудования, лицензионного ПО WIT.RU

Circuit Overloading

Consideration should be given to the connection of the equipment to the power supply circuitry and the effect that any possible overloading of circuits might have on overcurrent protection and power supply wiring. Appropriate consideration of equipment nameplate ratings should be used when addressing this concern.

Reliable Ground

A reliable ground must be maintained at all times. To ensure this, the rack itself should be grounded. Particular attention should be given to power supply connections other than the direct connections to the branch circuit (i.e. the use of power strips, etc.).

To prevent bodily injury when mounting or servicing this unit in a rack, you must take special precautions to ensure that the system remains stable. The following guidelines are provided to ensure your safety:

- This unit should be mounted at the bottom of the rack if it is the only unit in the rack.
- When mounting this unit in a partially filled rack, load the rack from the bottom to the top with the heaviest component at the bottom of the rack.
- If the rack is provided with stabilizing devices, install the stabilizers before mounting or servicing the unit in the rack.

Slide rail mounted equipment is not to be used as a shelf or a work space.

Warning: do not pick up the server with the front handles. They are designed to pull the system from a rack only.

WIT Company – поставка серверов, СХД, сетевого оборудования, лицензионного ПО WIT.RU

2.3 Installing the Rails

There are a variety of rack units on the market, which may require a slightly different assembly procedure.

The following is a basic guideline for installing the system into a rack with the rack mounting hardware provided. You should also refer to the installation instructions that came with the specific rack you are using.

Identifying the Rails

Each assembly consists of two sections: an inner fixed chassis rail that secures directly to the server chassis and an outer fixed rack rail that secures directly to the rack itself.

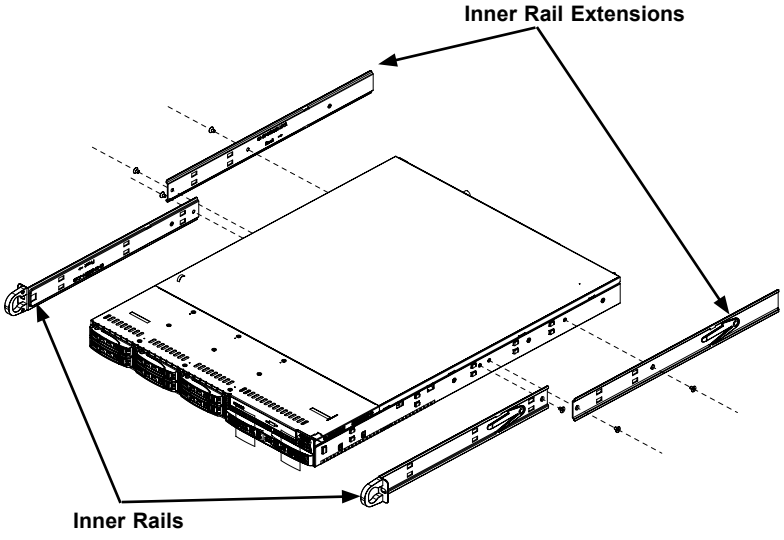

Figure 2-1. Identifying the Sections of the Rack Rails

WIT Company – поставка серверов, СХД, сетевого оборудования, лицензионного ПО WIT.RU

Inner Rails

The SC113MFTS-605CBP chassis includes a set of inner rails in two sections: inner rails and inner rail extensions. The inner rails are pre-attached and do not interfere with normal use of the chassis if you decide not to use a server rack. Attach the inner rail extension to stabilize the chassis within the rack.

Installing the Inner Rails Extensions

1. Place the inner rack extensions on the side of the chassis aligning the hooks of the chassis with the rail extension holes. Make sure the extension faces "outward" just like the pre-attached inner rail.
2. Slide the extension toward the front of the chassis.
3. Secure the chassis with two screws as illustrated.
4. Repeat steps 1-3 for the other inner rail extension.

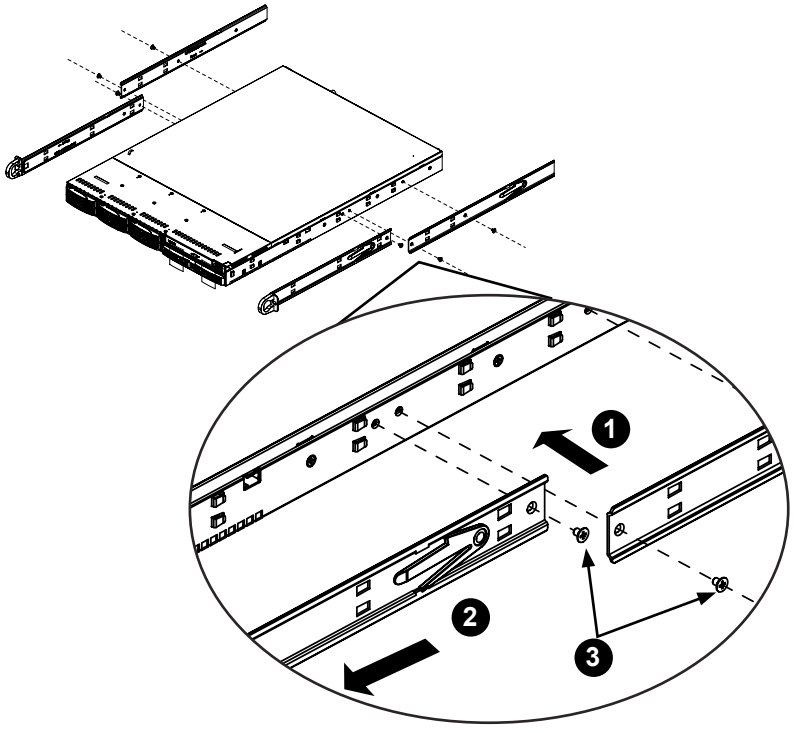

Figure 2-2. Installing the Chassis Rails

Note: Both front chassis rails and the rack rails have a locking tab, which serves two functions. First, it locks the server into place when installed and pushed fully into the rack (its normal operating position. In addition, these tabs lock the server in place when fully extended from the rack. This prevents the server from coming completely out of the rack when pulled out for servicing.

WIT Company – поставка серверов, СХД, сетевого оборудования, лицензионного ПО WIT.RU

Outer Rails

Installing the Outer Rails to the Rack

1. Attach the short bracket to the outside of the long bracket. You must align the pins with the slides. Also, both bracket ends must face the same direction.
2. Adjust both the short and long brackets to the proper distance so that the rail fits snugly into the rack.
3. Secure the long bracket to the front side of the outer rail with two M5 screws and the short bracket to the rear side of the outer rail with three M5 screws.
4. Repeat steps 1-4 for the left outer rail.

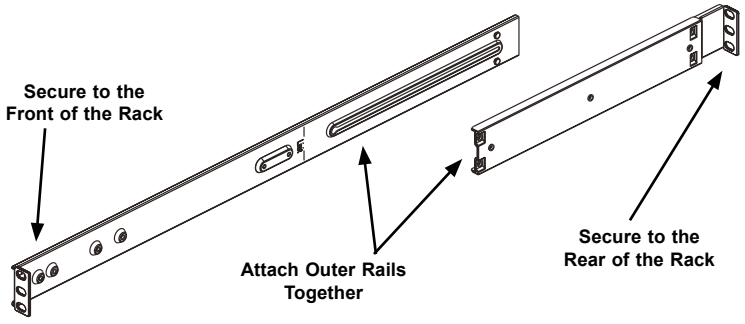

Figure 2-3. Assembling the Outer Rails

Installing the Chassis into a Rack

1. Confirm that chassis includes the inner rails and rail extensions . Also, confirm that the outer rails are installed on the rack.
2. Line chassis rails with the front of the rack rails.
3. Slide the chassis rails into the rack rails, keeping the pressure even on both sides (you may have to depress the locking tabs when inserting). When the server has been pushed completely into the rack, you should hear the locking tabs "click".
4. (Optional) Insert and tightening the thumbscrews that hold the front of the server to the rack.

WIT Company – поставка серверов, СХД, сетевого оборудования, лицензионного ПО WIT.RU

2.4 Installing the Server into a Rack

You should now have rails attached to both the chassis and the rack. The next step is to install the server into the rack.

1. Line up the rear of the chassis rails with the front of the rack rails.
2. Slide the chassis rails into the rack rails, keeping the pressure even on both sides (you may have to press the locking tabs when inserting). See Figure 2-4.
3. When the server has been pushed completely into the rack, you should hear the locking tabs "click".

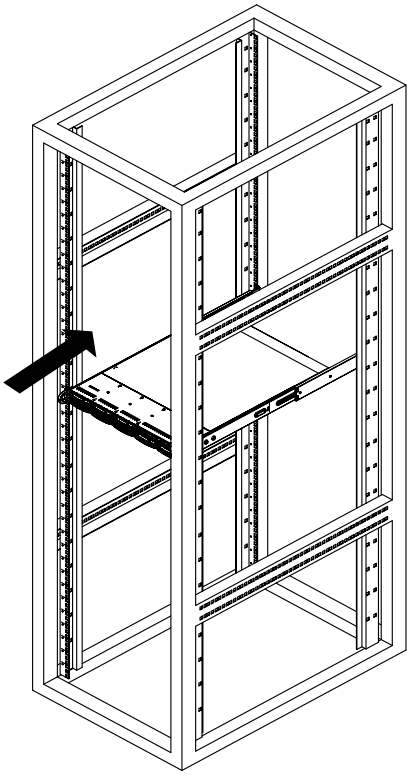

Figure 2-4. Installing the Server into a Rack

Note: Figure is for illustrative purposes only. Always install servers to the bottom of a rack first.

WIT Company – поставка серверов, СХД, сетевого оборудования, лицензионного ПО WIT.RU

Installing the Server into a Telco Rack

To install the SuperServer 1029P-MT/MTR into a Telco (or “open”) type rack, use two L-shaped brackets on either side of the chassis (four total).

1. First, determine how far the server will extend out from the front of the rack. The chassis should be positioned so that the weight is balanced between front and back.
2. Attach the two front brackets to each side of the chassis, then the two rear brackets positioned with just enough space to accommodate the width of the rack.
3. Finish by sliding the chassis into the rack and tightening the brackets to the rack.

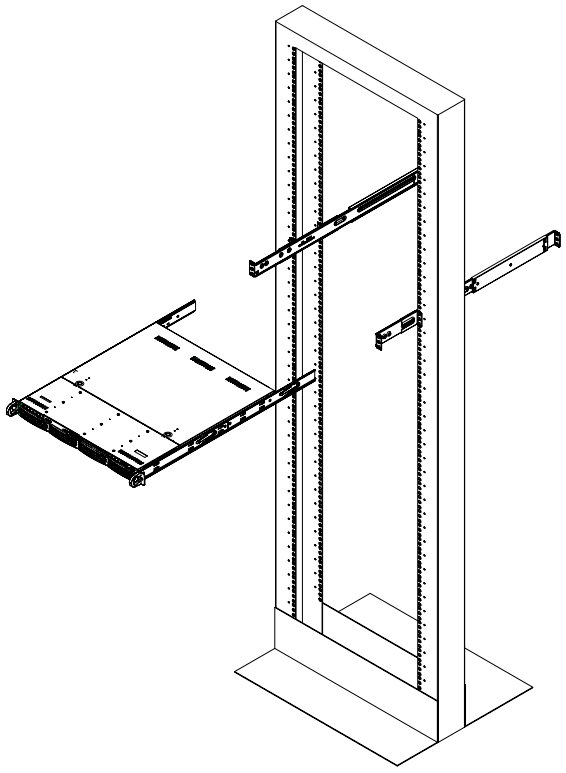

Figure 2-5. Installing the Server into a Telco Rack

Note: Figure is for illustrative purposes only. Always install servers to the bottom of a rack first.

WIT Company – поставка серверов, СХД, сетевого оборудования, лицензионного ПО WIT.RU

Chapter 3

Maintenance and Component Installation

This chapter provides instructions on installing and replacing main system components. To prevent compatibility issues, only use components that match the specifications and/or part numbers given.

Installation or replacement of most components require that power first be removed from the system. Please follow the procedures given in each section.

3.1 Removing Power

Use the following procedure to ensure that power has been removed from the system. This step is necessary when removing or installing non hot-swap components or when replacing a non-redundant power supply.

1. Use the operating system to power down the system.
2. After the system has completely shut-down, disconnect the AC power cord(s) from the power strip or outlet. (If your system has more than one power supply, remove the AC power cords from all power supply modules)
3. Disconnect the power cord(s) from the power supply module(s).

3.2 Accessing the System

The SC113MFTS-605CBP/R804CBP features a removable top cover, which allows easy access to the inside of the chassis.

Removing the Top Cover

1. Power down the system as described in Section 3.1.
2. Slide the cover toward the rear of the chassis.
3. Lift the cover from the chassis.

WIT Company – поставка серверов, СХД, сетевого оборудования, лицензионного ПО WIT.RU

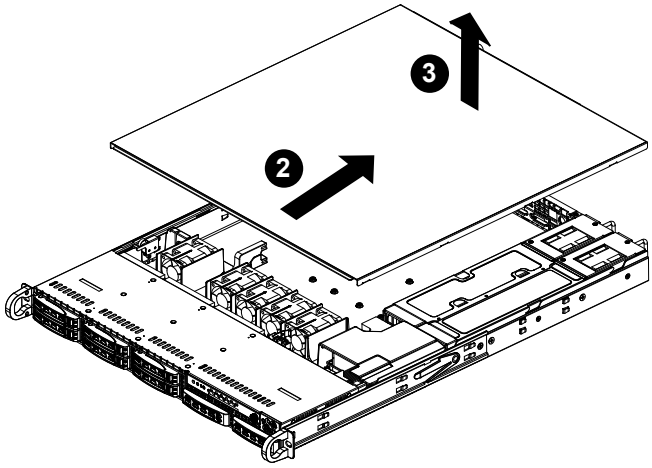

Figure 3-1. Removing the Top Cover

Note: the figure above is for illustrative purposes only. The 1029P-MT features a single power supply only.

3.3 Motherboard Components

Processor and Heatsink Installation

The Dual Intel Xeon 81xx/61xx/51xx/41xx/31xx series or 82xx/62xx/52xx/42xx/32xx series processors comes in two models: Fabric (F model) and Non-Fabric (Non-F model). Only the Non-Fabric model is supported for this system.

The processor (CPU) and heatsink should be assembled together first to form the processor heatsink module (PHM), and then install the PHM into the CPU socket.

Caution: Use ESD protection. Do not touch the underside of the CPU. Improper installation or socket misalignment can cause serious damage to the CPU or socket which may require manufacturer repairs.

Notes:

- All power should be off, as described in Section 3.1, before installing the processors.
- When handling the processor package, avoid placing direct pressure on the label area of the CPU or socket.
- Check that the plastic socket dust cover is in place and none of the socket pins are bent—otherwise, contact your retailer.
- Refer to the Supermicro website for updates on CPU support.
- Graphics in this manual are for illustration. Your components may look slightly different.

WIT Company – поставка серверов, СХД, сетевого оборудования, лицензионного ПО WIT.RU

The Xeon Scalable Processor

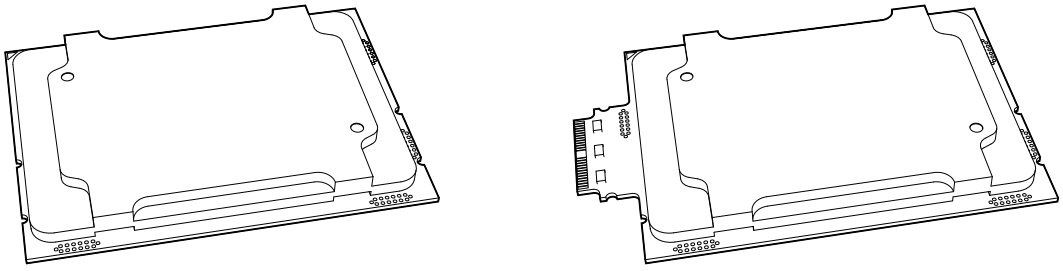

Non-F model Processor

F model Processor

Figure 3-2. Xeon Scalable Processors

Assembling the Processor Package

Attach the processor to the thin processor clip to create the processor package.

1. On the top corner of the CPU, locate pin 1 (A), marked by a triangle. Also, locate notch B and notch C (and notch D for F models) on the CPU as shown below.
2. On the top of the processor clip, locate the corner marked by a hollow triangle as the position for pin 1. Also locate notch B and notch C (and D for F models) on the processor clip.
3. Align pin 1 of the CPU with its proper position on the processor clip and carefully insert the CPU into the processor clip. Slide notch B of the CPU into tab B of the processor clip, and slide notch C of the CPU into tab C of the processor clip (and D for F models) until the processor clip tabs snap onto the CPU.
4. Examine all corners to ensure that the CPU is properly seated and secure on the processor clip.

The processor package assembly is created.

WIT Company – поставка серверов, СХД, сетевого оборудования, лицензионного ПО WIT.RU

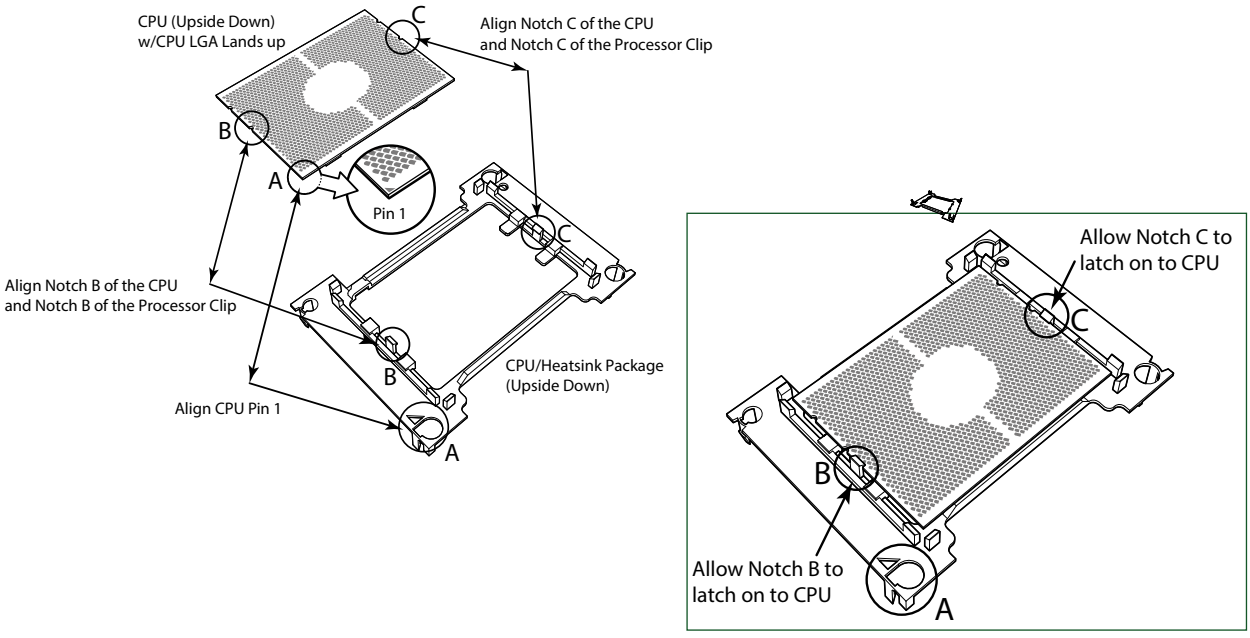

Figure 3-3. Processor Package Assembly for the non-F Model Processors

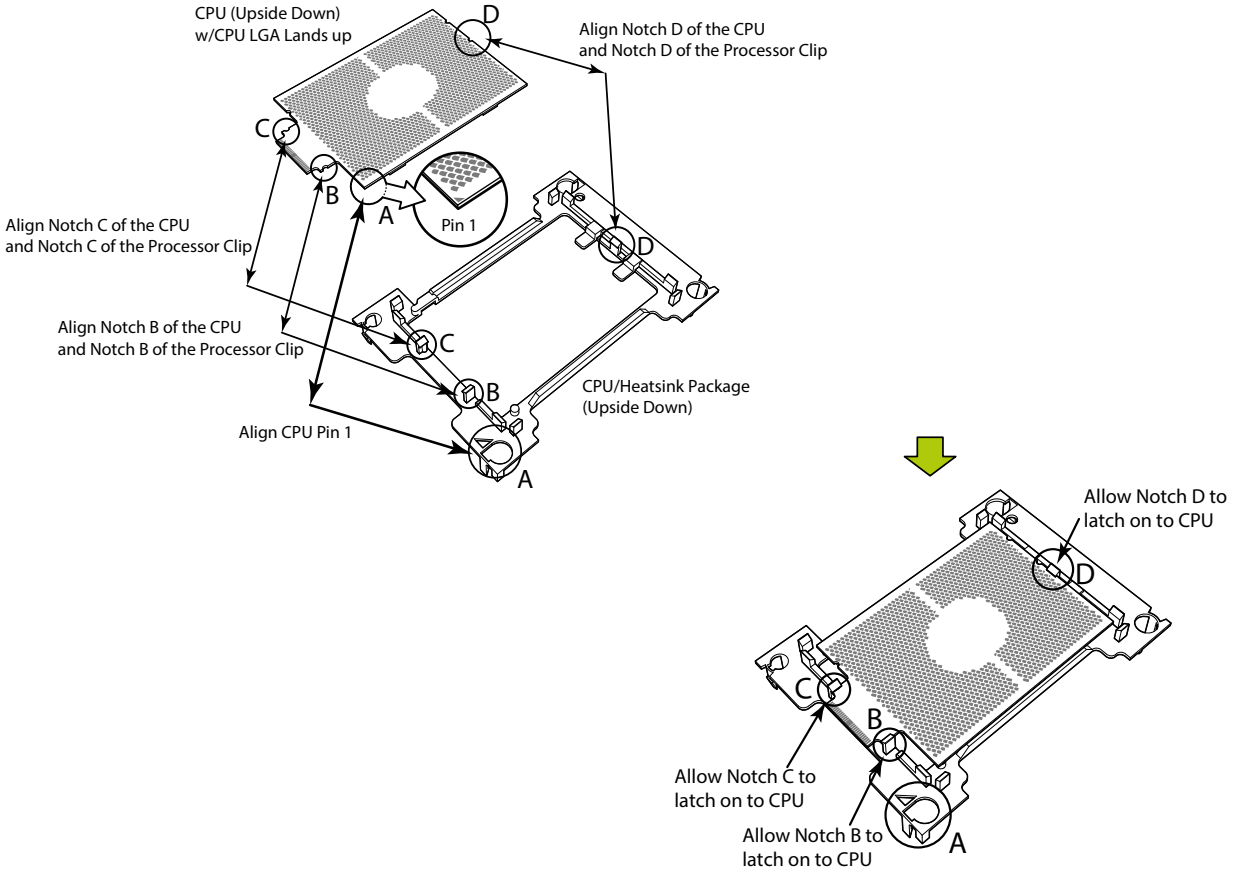

Figure 3-4. Processor Package Assembly for the F Model Processors

WIT Company – поставка серверов, СХД, сетевого оборудования, лицензионного ПО WIT.RU

After creating the processor package assembly, mount it onto the heatsink to create the processor heatsink module (PHM).

1. On the heatsink label, locate "1" and the corner next to it. Turn the heatsink upside down with the thermal grease side facing up, keeping track of the "1" corner.
2. Remove the protective thermal film if present. If this is a new heatsink, the necessary thermal grease has been pre-applied in the factory. If the heatsink is not new, apply the proper amount of the thermal grease.
3. In the plastic processor clip, locate the hollow triangle at the corner ("a" in the drawing below) next to a hole and plastic mounting clips. There is a similar hole and mounting clips at the diagonal corner of the of the processor clip ("b" in the drawing).
4. With the underside of heatsink and the underside of the processor package facing up, align the "1" corner on the heatsink ("A" in the drawing) against the mounting clips next to the hollow triangle ("a") on the processor package.
5. Also align the corner ("B") at the diagonal side of the heatsink with the corresponding clips on the processor package ("b").
6. Once aligned, press the processor package assembly onto the heatsink until the mounting clips (at a, b, c, and d) snap into place.

The processor heatsink module is assembled.

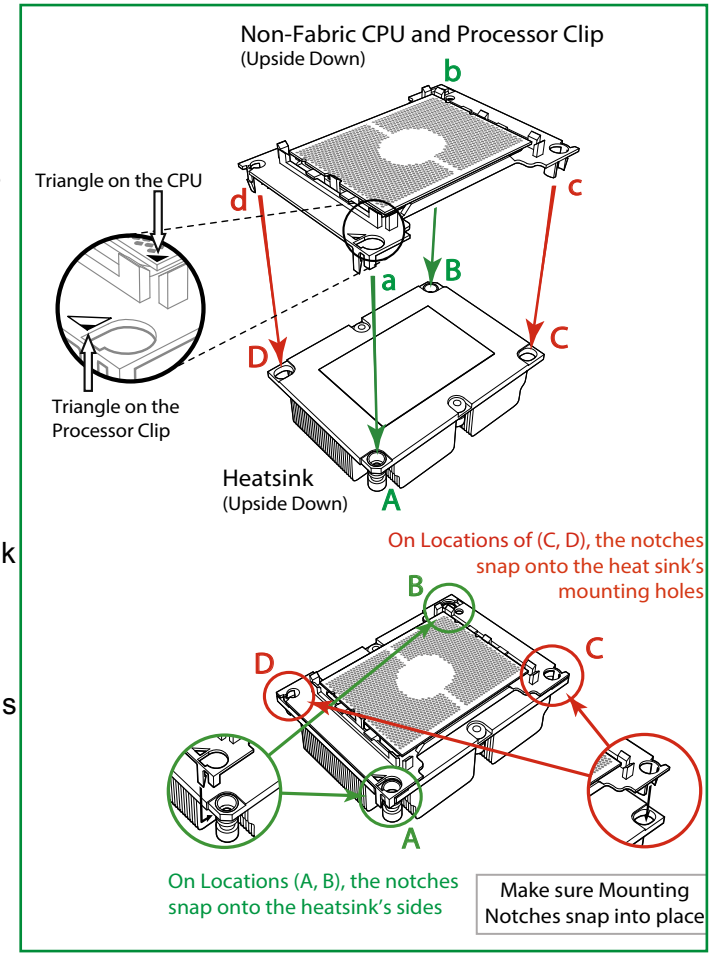

Figure 3-5. Assembling the Processor Heatsink Module

WIT Company – поставка серверов, СХД, сетевого оборудования, лицензионного ПО WIT.RU

Removing the Dust Cover from the CPU Socket

Remove the dust cover from the CPU socket, exposing the socket pins as shown below.

Caution: Do not touch the socket pins.

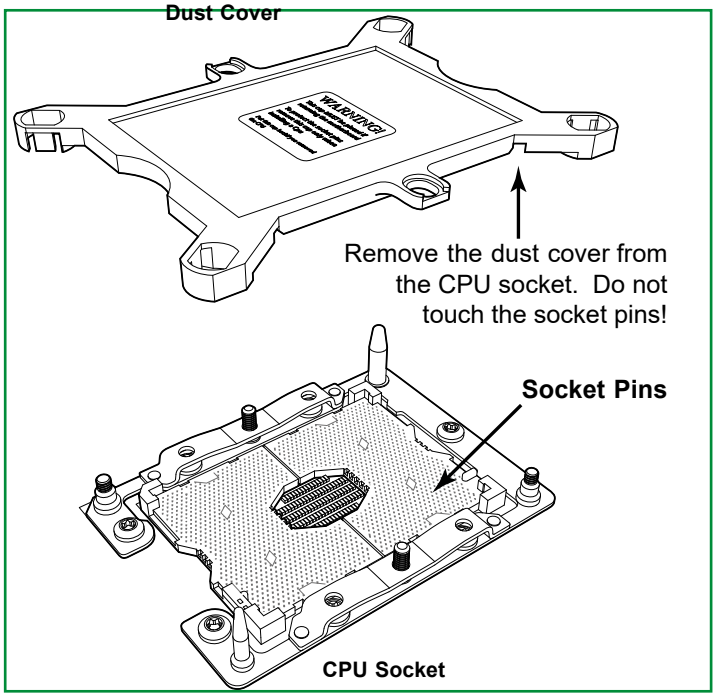

Figure 3-6. Removing the Socket Dust Cover

WIT Company – поставка серверов, СХД, сетевого оборудования, лицензионного ПО WIT.RU

Installing the Processor Heatsink Module (PHM)

1. Locate the triangle (pin 1) on the CPU socket. Also locate the pin 1 corner of the PHM that is closest to "1" on the heatsink label. To confirm, look at the underside of the PHM and note the hollow triangle in the processor clip and printed triangle on the CPU located next to a screw at the corner.
2. Align the pin 1 corner of the PHM over the pin 1 corner on the CPU socket.
3. Align the two holes at diagonal corners of the PHM onto the two guide posts on the socket bracket and carefully lower the PHM onto the socket.
4. Use a T30 Torx-bit screwdriver to install four screws into the mounting holes on the socket to securely attach the PHM onto the motherboard in the sequence of 1, 2, 3, and 4, as marked on the heatsink label. Gradually tighten each to assure even pressure.

Note: Use only 12 foot-pounds of torque when tightening the screws to avoid damaging the processor or the socket.

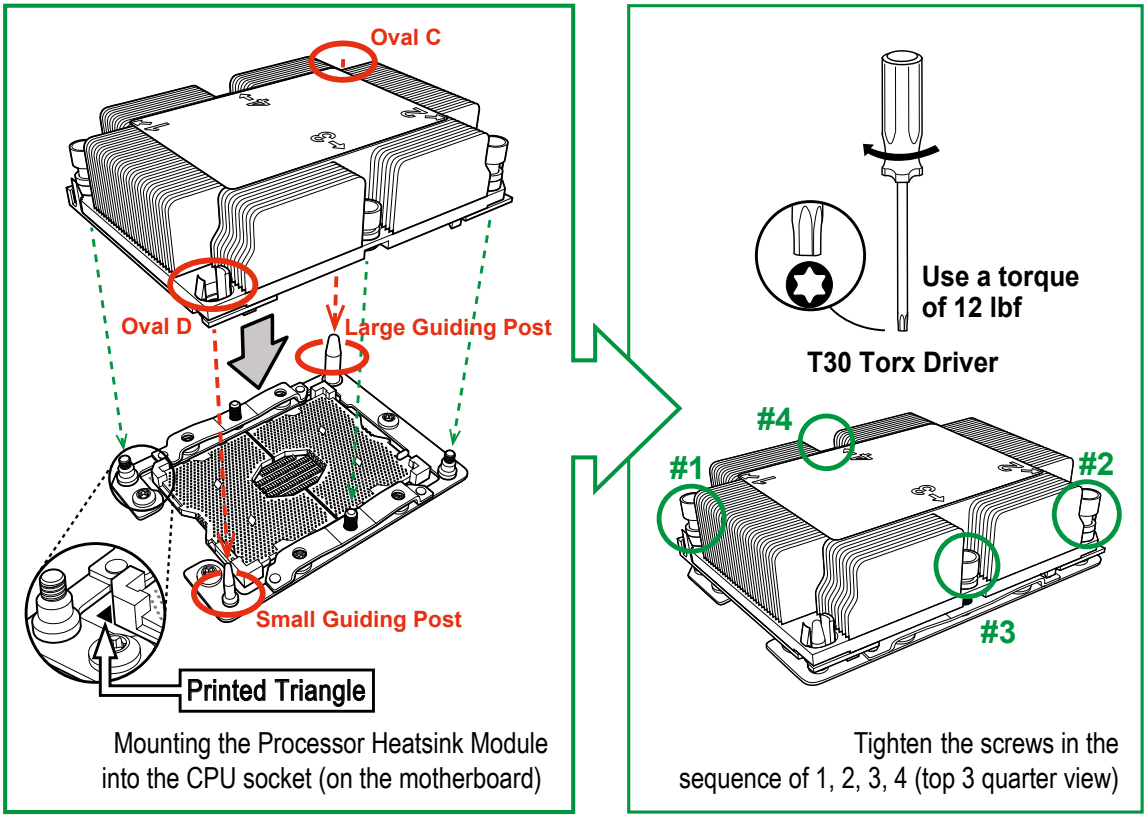

Figure 3-7. Installing the Processor Heatsink Module

WIT Company – поставка серверов, СХД, сетевого оборудования, лицензионного ПО WIT.RU

Removing the Processor Heatsink Module from the Motherboard

Before removing the processor heatsink module (PHM), power down as described in Section 3.1.

1. Using a T30 Torx-bit screwdriver, loosen and remove the screws on the PHM from the socket, starting with the screw marked #4, in the sequence of 4, 3, 2, 1.
2. Pull up the PHM while releasing the small snap tabs on two corners of the socket.

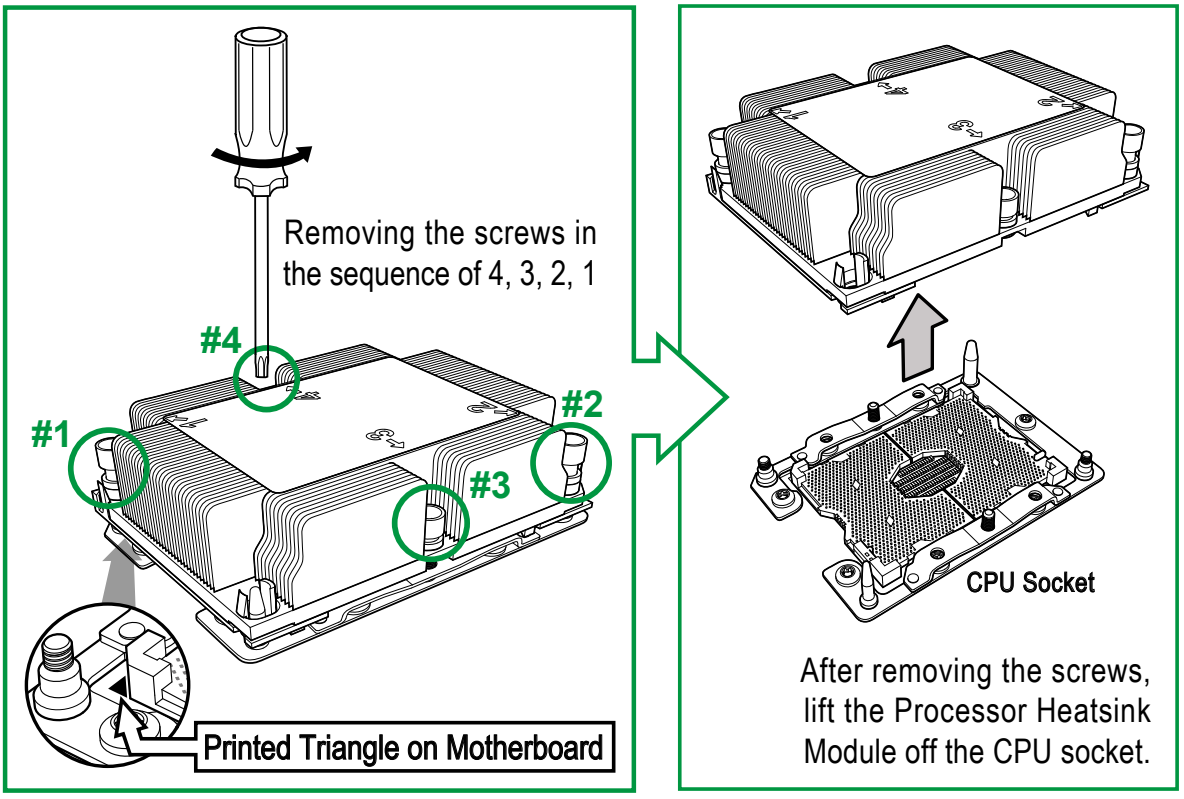

Figure 3-8. Removing the Processor Heatsink Module

WIT Company – поставка серверов, СХД, сетевого оборудования, лицензионного ПО WIT.RU

Memory Installation

Memory Support

The X11DPL-i supports up to 2TB of 3DS ECC RDIMM/LRDIMM DDR4-2933/2666/2400/2133 memory in eight slots. Populating these DIMM slots with memory modules of the same type and size will result in interleaved memory, which will improve memory performance.

Note: 2933 MHz memory is supported by the 82xx/62xx platform only..

Memory Population Table	
CPUs/DIMMs	**Memory Population Sequence**
1 CPU & 1 DIMM	CPU1: P1-DIMMA1
1 CPU & 2 DIMMs	CPU1: P1-DIMMA1/P1-DIMMD1
1 CPU & 3 DIMMs (Unbalanced: not recommended)	CPU1: P1-DIMMB1/P1-DIMMA1/P1-DIMMD1
1 CPU & 4 DIMMs	CPU1: P1-DIMMB1/P1-DIMMA1/P1-DIMMD1/P1-DIMME1
2 CPUs & 2 DIMMs	CPU1: P1-DIMMA1 CPU2: P2-DIMMA1
2 CPUs & 4 DIMMs	CPU1: P1-DIMMA1/P1-DIMMD1 CPU2: P2-DIMMA1/P2-DIMMD1
2 CPUs & 6 DIMMs	CPU1: P1-DIMMB1/P1-DIMMA1/P1-DIMMD1/P1-DIMME1 CPU2: P2-DIMMA1/P2-DIMMD1
2 CPUs & 8 DIMMs	CPU1: P1-DIMMB1/P1-DIMMA1/P1-DIMMD1/P1-DIMME1 CPU2: P2-DIMMB1/P2-DIMMA1/P2-DIMMD1/P2-DIMME1

- For each individual population, rearrangements between channels are allowed as long as the resulting population is compliant with the PDG rules for the 82xx/62xx/52xx platform.
- For each individual population, please use the same DDR4 DIMM in all slots as specified by the PDG rules.

WIT Company – поставка серверов, СХД, сетевого оборудования, лицензионного ПО WIT.RU

DDR4 Memory Support for the 81xx/61xx/51xx/41xx/31xx Platform

DDR4 Memory Support (for 1-Slot Per-Channel Configuration)				
Type	Ranks Per DIMM and Data Width	DIMM Capacity (GB)		Speed (MT/s); Voltage (V); Slots per Channel (SPC) and DIMMs per Channel (DPC)
				1 or 2 Slots per Channel
		DRAM Density		1DPC (1-DIMM per Channel)
		4Gb*	8Gb	1.2 V
RDIMM	SRx4	4GB	8GB	2666
RDIMM	SRx8	8GB	16GB	2666
RDIMM	DRx8	8GB	16GB	2666
RDIMM	DRx4	16GB	32GB	2666
RDIMM 3Ds	QRX4	N/A	2H-64GB	2666
RDIMM 3Ds	8RX4	N/A	4H-128GB	2666
LRDIMM	QRx4	32GB	64GB	2666
LRDIMM 3Ds	QRX4	N/A	2H-64GB	2666
	8Rx4	N/A	4H-128GB	2666

DDR4 Memory Support for the 82xx/62xx/52xx/42xx/32xx Platform*

DDR4 Memory Support (for 1-Slot Per-Channel Configuration)							
Type	Ranks Per DIMM and Data Width	DIMM Capacity (GB)			Speed (MT/s); Voltage (V); Slots per Channel (SPC) and DIMMs per Channel (DPC)		
					1 Slot per Channel	2 Slots per Channel	
		DRAM Density			1DPC	1DPC	2DPC
		4Gb*	8Gb	16Gb	1.2 V	1.2 V	1.2 V
RDIMM	SRx4	4GB	8GB	16GB	2933	2933	2666
RDIMM	SRx8	8GB	16GB	32GB	2933	2933	2666
RDIMM	DRx8	8GB	16GB	32GB	2933	2933	2666
RDIMM	DRx4	16GB	32GB	32GB	2933	2933	2666
RDIMM 3Ds	QRX4	N/A	2H-64GB	2H-128GB	2933	2933	2666
RDIMM 3Ds	8RX4	N/A	4H-128GB	4H-256GB	2933	2933	2666
LRDIMM	QRx4	32GB	64GB	128GB	2933	2933	2666
LRDIMM 3Ds	QRX4	N/A	2H-64GB	2H-128GB	2933	2933	2666
	8Rx4	N/A	4H-128GB	4H-256GB	2933	2933	2666

*DDR2933 is not supported by the 52xx/42xx/32xx platform.

WIT Company – поставка серверов, СХД, сетевого оборудования, лицензионного ПО WIT.RU

DDR4 Memory Support for the 82xx/62xx/52xx/42xx/32xx Platform*

DDR4 Memory Support (for 2-Slot Per-Channel Configuration)					
Type	Ranks Per DIMM & Data Width	DIMM Capacity (GB)		Speed (MT/s); Voltage (V); Slots per Channel (SPC) and DIMMs per Channel (DPC)	
				2 Slots per Channel	
		DRAM Density		1DPC (1-DIMM per Channel)	2DPC (2-DIMM per Channel)
		4Gb*	8Gb	1.2 V	1.2 V
RDIMM	SRx4	4GB	8GB	2933	2666
RDIMM	SRx8	8GB	16GB	2933	2666
RDIMM	DRx8	8GB	16GB	2933	2666
RDIMM	DRx4	16GB	32GB	2933	2666
RDIMM 3Ds	QRX4	N/A	2H-64GB	2933	2666
RDIMM 3Ds	8RX4	N/A	4H-128GB	2933	2666
LRDIMM	QRx4	32GB	64GB	2933	2666
LRDIMM 3Ds	QRX4	N/A	2H-64GB	2933	2666
LRDIMM 3Ds	8Rx4	N/A	4H-128GB	2933	2666

DDR4 Memory Support (for 1-Slot Per-Channel Configuration)				
Type	Ranks Per DIMM and Data Width	DIMM Capacity (GB)		Speed (MT/s); Voltage (V); Slots per Channel (SPC) and DIMMs per Channel (DPC)
				1 Slot per Channel
		DRAM Density		1DPC (1-DIMM per Channel)
		4Gb*	8Gb	1.2 V
RDIMM	SRx4	4GB	8GB	2933
RDIMM	SRx8	8GB	16GB	2933
RDIMM	DRx8	8GB	16GB	2933
RDIMM	DRx4	16GB	32GB	2933
RDIMM 3Ds	QRX4	N/A	2H-64GB	2933
RDIMM 3Ds	8RX4	N/A	4H-128GB	2933
LRDIMM	QRx4	32GB	64GB	2933
LRDIMM 3Ds	QRX4	N/A	2H-64GB	2933
	8Rx4	N/A	4H-128GB	2933

*DDR2933 is not supported by the 52xx/42xx/32xx platform.

WIT Company – поставка серверов, СХД, сетевого оборудования, лицензионного ПО WIT.RU

Installing Memory

ESD Precautions

Electrostatic Discharge (ESD) can damage electronic components including memory modules. To avoid damaging DIMM modules, it is important to handle them carefully. The following measures are generally sufficient.

- Use a grounded wrist strap designed to prevent static discharge.
- Handle the memory module by its edges only.
- Put the memory modules into the antistatic bags when not in use.

Installing Memory

Begin by removing power from the system as described in Section 3.1. Follow the memory population sequence in the table above.

1. Push the release tabs outwards on both ends of the DIMM slot to unlock it.
2. Align the key of the DIMM with the receptive point on the memory slot and with your thumbs on both ends of the module, press it straight down into the slot until the module snaps into place.

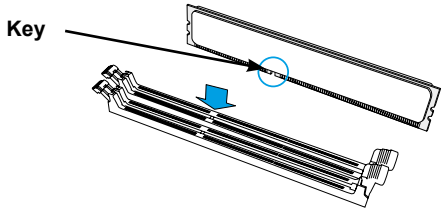

3. Press the release tabs to the locked position to secure the DIMM module into the slot.

Caution: Exercise extreme caution when installing or removing memory modules to prevent damage to the DIMMs or slots.

Removing Memory

To remove a DIMM, unlock the release tabs then pull the DIMM from the memory slot.

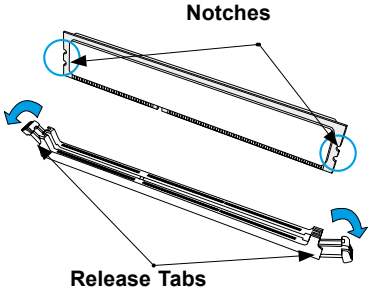

WIT Company – поставка серверов, СХД, сетевого оборудования, лицензионного ПО WIT.RU

PCI Expansion Card Installation

The system includes a pre-installed riser card (p/n RSC-RR1U-E8) that positions a standard size PCI-E x8 card at a 90 degree angle, allowing it to fit inside the chassis.

Installing PCI Expansion Cards

The RSC-RR1U-E8 riser card has already been pre installed into the motherboard. Perform the following steps to install an add-on card:

Begin by removing power from the system as described in section 3.1.

1. Remove the chassis cover to access the inside of the system.
2. Remove the PCI slot shield on the chassis by releasing the locking tab.
3. Insert the expansion (add-on) card into the riser card.
4. Secure the card with the locking tab.

Motherboard Battery

The motherboard uses non-volatile memory to retain system information when system power is removed. This memory is powered by a lithium battery residing on the motherboard.

Replacing the Battery

Begin by removing power from the system as described in section 3.1.

1. Push aside the small clamp that covers the edge of the battery. When the battery is released, lift it out of the holder.
2. To insert a new battery, slide one edge under the lip of the holder with the positive (+) side facing up. Then push the other side down until the clamp snaps over it.

Note: Please handle used batteries carefully. Do not damage the battery in any way; a damaged battery may release hazardous materials into the environment. Do not discard a used battery in the garbage or a public landfill. Please comply with the regulations set up by your local hazardous waste management agency to dispose of your used battery properly.

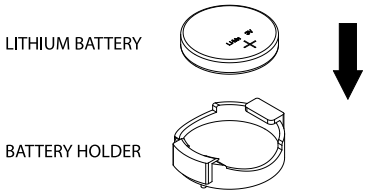

Figure 3-9. Installing the Onboard Battery

Warning: There is a danger of explosion if the onboard battery is installed upside down (which reverses its polarities). This battery must be replaced only with the same or an equivalent type recommended by the manufacturer (CR2032).

WIT Company – поставка серверов, СХД, сетевого оборудования, лицензионного ПО WIT.RU

3.4 Chassis Components

Hard Drives

Your server may or may not have come with hard drives installed. Up to eight 2.5" hard drives are supported by the chassis.

The SATA drives are mounted in drive carriers to simplify their installation and removal from the chassis. (Both procedures may be done without removing power from the system.)

Removing a Hot-Swap Drive Carrier

1. Push the release button on the carrier.
2. Swing the handle fully out.
3. Grasp the handle and use it to pull the drive carrier out of its bay.

Mounting a Drive in a Drive Carrier

1. To add a new drive, install it into the carrier with the printed circuit board side facing down so that the mounting holes align with those in the carrier.
2. Secure the drive to the carrier with the screws provided, then push the carrier completely into the drive bay. You should hear a *click* when the drive is fully inserted. This indicates that the carrier has been fully seated and connected to the midplane, which automatically makes the power and logic connections to the hard drive.

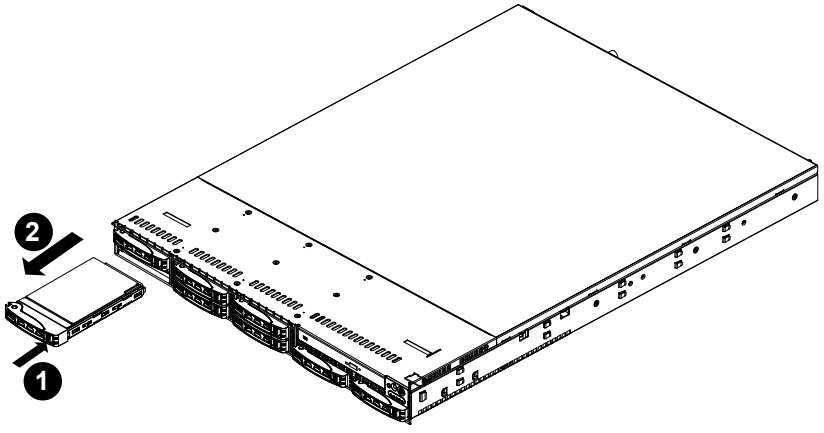

Figure 3-10. Removing a Drive Carrier

WIT Company – поставка серверов, СХД, сетевого оборудования, лицензионного ПО WIT.RU

Removing a Drive from a Drive Carrier

1. Remove the screws that secure the hard drive to the carrier and separate the hard drive from the carrier.
2. Replace the carrier back into the drive bay.

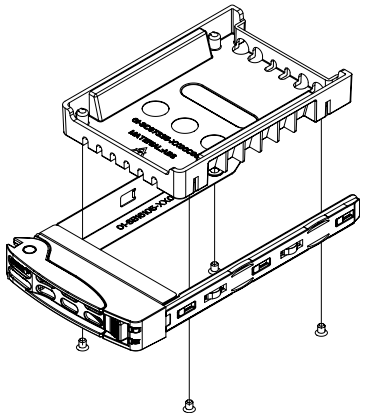

Figure 3-11. Mounting a Drive in a Carrier

Hard Drive Carrier Indicators

Each hard drive carrier has two LED indicators: an activity indicator and a status indicator. In RAID configurations, the status indicator lights to indicate the status of the drive. In non-RAID configurations, the status indicator remains off. See the table below for details.

Hard Drive Carrier LED Indicators		
LED	**State/Condition**	**Indication**
Green	Blinking	Indicates drive activity
Red	Solid on	Indicates drive failure

Note: Enterprise level hard disk drives are recommended for use in Supermicro chassis and servers. For information on recommended HDDs, visit the Supermicro website at http://www.supermicro.com/products/nfo/files/storage/SBB-HDDCompList.pdf

WIT Company – поставка серверов, СХД, сетевого оборудования, лицензионного ПО WIT.RU

System Cooling

Four 4-cm fans provide the cooling for the system. It is very important that the chassis top cover is installed for the cooling air to circulate properly through the chassis and cool the components.

Installing Fans

Fan speed is controlled by system temperature via IPMI. If a fan fails, the remaining fans will ramp up to full speed. Replace any failed fan at your earliest convenience with the same type and model (the system can continue to run with a failed fan).

Replacing a System Fan

1. If necessary, open the chassis while the power is running to determine which fan requires changing. (Never run the server for an extended period of time with the chassis open.)
2. Power down the system as described in Section 3.1.
3. Next, remove the top chassis cover as described in Section 3.2.
4. Remove the failed fan's cable from the connector on the motherboard.
5. Gently pull upward to remove the failed fan from the housing.
6. Place the new fan into the vacant space in the housing. Make sure that the arrows on the side of the fan (indicating air direction) point in the same direction as the arrows on the other fans.
7. Connect the fan wires to the same fan header as the fan just removed.
8. Plug the power cord into the rear of the power supply, power up the system and check that the fan is working properly before replacing the chassis cover.

WIT Company – поставка серверов, СХД, сетевого оборудования, лицензионного ПО WIT.RU

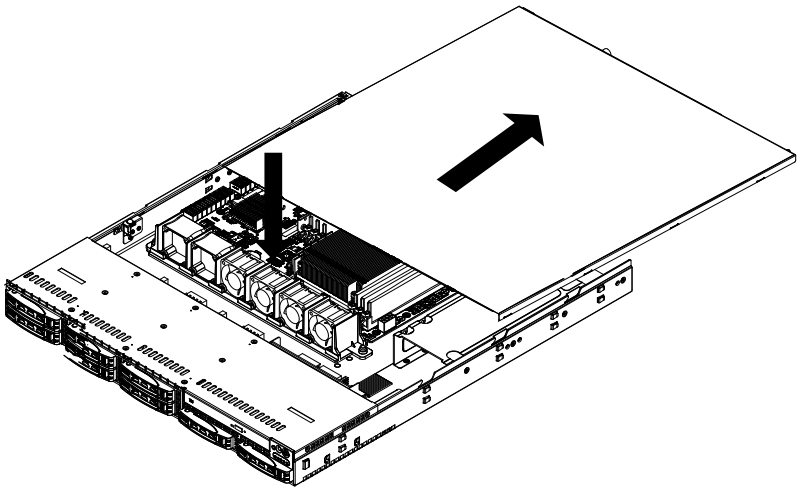

Figure 3-12. Replacing a System Fan

Air Shroud

The air shroud is used to concentrate airflow to maximize fan efficiency. The air shroud does not require screws to set up.

Installing the Air Shroud

1. Lay the chassis on a flat, stable surface and remove the chassis cover.
2. If necessary, move any cables that interfere with the air shroud placement.
3. Place the air shroud in the chassis. The air shroud fits just behind the fans. Slide the air shroud into the grooves just behind the fan rack.
4. Reroute any cables that were moved and replace the chassis cover.

WIT Company – поставка серверов, СХД, сетевого оборудования, лицензионного ПО WIT.RU

Power Supply

1029P-MT

The 1029P-MT has a single 600W power supply, which is auto-switching capable. This enables it to automatically sense and operate with a 100V to 240V input voltage.

Power Supply Failure

If the power supply unit fails, the system will shut down and you will need to replace the unit. Replacement units can be ordered directly from Supermicro (see contact information in the Preface).

Removing the Power Supply

Begin by removing power from the system as described in Section 3.1.

1. Releasing the retention screws that secure the chassis to the rack, then grasp the two handles on either side and pull the system straight out until it locks (you will hear a "click").
2. Next, remove the top chassis cover as described in Section 3.2.
3. To remove the failed power unit, remove the two screws that secure the power supply to the chassis. You can then pull the unit straight out of the chassis.

Installing a New Power Supply

1. Replace the failed power supply with another identical power supply module (exact same model, p/n PWS-605P-1H).
2. Carefully insert the new module into position in the chassis and secure it with the two screws you removed previously.
3. Reconnect the AC power cord.
4. Replace the chassis top cover and push the server back into the rack.
5. Finish by pressing the power button on the control panel to power on the server.

1029P-MTR

The 1029P-MTR has a redundant 800W power supply, consisting of two power supply modules. These power supplied are auto-switching capable, which enables it to automatically sense and operate with a 100V to 240V input voltage.

WIT Company – поставка серверов, СХД, сетевого оборудования, лицензионного ПО WIT.RU

Power Supply Failure

If either of the two power supply modules fail, the other module will take the full load and allow the system to continue operation without interruption. The Power Fail LED will illuminate and remain on until the failed unit has been replaced. Replacement units can be ordered directly from Supermicro (see contact information in the Preface).

The hot-swap capability of the power supply modules allows you to replace the failed module without powering down the system..

Replacing the Power Supply

1. Check the LEDs on the power supplies to determine which module has failed.
2. Unplug the power cord from the failed module.
3. Push the release tab (on the back of the power supply) as illustrated, then pull the power supply out using the handle provided.
4. Push the new power supply module into the power bay until you hear a click (replace with the same model: p/n PWS-804P-1R).
5. Reconnect the power cord to the new module.

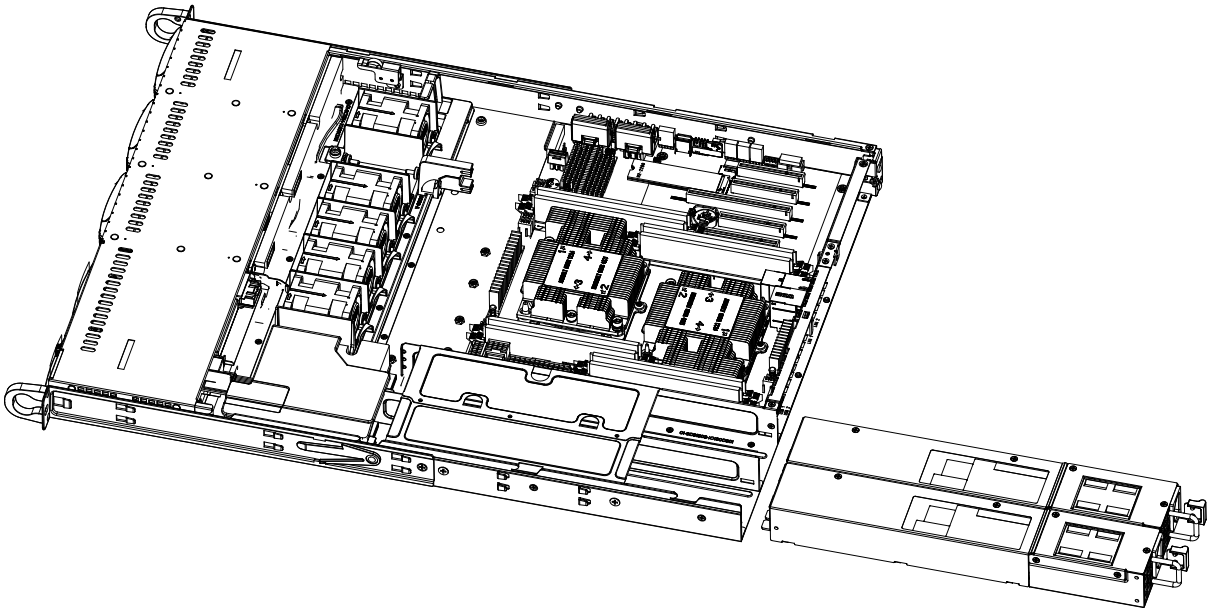

Figure 3-13. Removing/Replacing a Power Supply

Note: the 1029P-MTR is shown in the figure above, the 1029P-MT has only one power supply.

WIT Company – поставка серверов, СХД, сетевого оборудования, лицензионного ПО WIT.RU

Chapter 4

Motherboard Connections

This section describes the connections on the motherboard and provides pinout definitions. Note that depending on how the system is configured, not all connections are required. The LEDs on the motherboard are also described here. A serverboard layout indicating component locations may be found in Appendix B.

Please review the Safety Precautions in Chapter 3 before installing or removing components.

4.1 Power Connections

The power connections on the X11DPL-i must be connected to the power supply. The wiring is included with the power supply.

- 24-pin Primary ATX Power (JPWR3)
- 8-pin Processor Power (JPWR1/2)

Main ATX Power Connector

The primary power connector (JPWR3) meets the ATX SSI EPS 24-pin specification. You must also connect the 8-pin (JPWR1/2) processor power connectors to your power supply.

ATX Power 24-pin Connector Pin Definitions

Pin#	Definition	Pin#	Definition
13	+3.3V	1	+3.3V
14	-12V	2	+3.3V
15	Ground	3	Ground
16	PS_ON	4	+5V
17	Ground	5	Ground
18	Ground	6	+5V
19	Ground	7	Ground
20	Res (NC)	8	PWR_OK
21	+5V	9	5VSB
22	+5V	10	+12V
23	+5V	11	+12V
24	Ground	12	+3.3V

Required Connection

Important: To provide adequate power to the motherboard, connect the 24-pin *and* the 8-pin power connectors to the power supply. Failure to do so may void the manufacturer's warranty on your power supply and motherboard.

WIT Company – поставка серверов, СХД, сетевого оборудования, лицензионного ПО WIT.RU

Secondary Power Connector

JPWR2 must also be connected to the power supply. This connector is used to power the processor(s).

+12V 8-pin Power Pin Definitions	
Pin#	Definition
1 - 4	Ground
5 - 8	+12V

Required Connection

4.2 Headers and Connectors

Fan Headers

There are eight fan headers on the motherboard. These are 4-pin fan headers; pins 1-3 are backward compatible with traditional 3-pin fans. The onboard fan speeds are controlled by Thermal Management (via Hardware Monitoring) in the BIOS. When using Thermal Management setting, please use all 3-pin fans or all 4-pin fans.

Fan Header Pin Definitions	
Pin#	Definition
1	Ground (Black)
2	+12V (Red)
3	Tachometer
4	PWM Control

TPM Header

The JTPM1 header is used to connect a Trusted Platform Module (TPM)/Port 80, which is available from a third-party vendor. A TPM/Port 80 connector is a security device that supports encryption and authentication in hard drives. It allows the motherboard to deny access if the TPM associated with the hard drive is not installed in the system. See the table below for pin definitions.

Trusted Platform Module/Port 80 Header Pin Definitions			
Pin#	Definition	Pin#	Definition
1	+3.3V	2	SPI_CS#
3	RESET#	4	SPI_MISO
5	SPI_CLK	6	GND
7	SPI_MOSI	8	
9	+3.3V Stdby	10	SPI_IRQ#

WIT Company – поставка серверов, СХД, сетевого оборудования, лицензионного ПО WIT.RU

M.2 Slot

The X11DPL-i motherboard has one M.2 slot that is supported by the PCH. M.2 was formerly Next Generation Form Factor (NGFF) and are used to replace mini PCI-E. M.2 supports a variety of card sizes with increased functionality and spatial efficiency. The M.2 socket on the motherboard supports PCI-E 3.0 x4 (32 Gb/s) SSD cards in the 2280 form factor.

Micro SD Card

There is one Micro SD memory card slot located at JSDCARD1 on the motherboard.

I-SATA 3.0 and S-SATA 3.0 Ports

The X11DPL-i has eight I-SATA 3.0 ports (I-SATA0~7) and two S-SATA 3.0 ports (S-SATA0/1) on the motherboard. These SATA ports are supported by the Intel C621 chipset. All these SATA ports provide serial-link signal connections, which are faster than the connections of Parallel ATA.

Intel RAID Key Pin Definitions

Pins	Definition
1	GND
2	3.3V Stdby
3	GND
4	PCH RAID KEY

Unit Identifier Switch/UID LED Indicator

A Unit Identifier (UID) switch (UID) and a UID LED Indicator (LE1) are located on the I/O back panel. When you press the UID switch, the UID LED indicator will be turned on. Press the UID switch again to turn off the LED. The UID Indicator provides easy identification of a system unit that may be in need of service.

Note: UID can also be triggered via IPMI on the motherboard. For more information on IPMI, please refer to the IPMI User's Guide posted on our website at http://www.supermicro.com.

UID LED Pin Definitions

Color	Status
Blue: On	Unit Identified

UID Switch Pin Definitions

Pin#	Definition
1	Button In
2	Ground
3	Ground
4	Ground

WIT Company – поставка серверов, СХД, сетевого оборудования, лицензионного ПО WIT.RU

RAID Key Header

A RAID Key header is located at JRK1 on the motherboard. The RAID key is used to support CPU NVMe SSD.

Control Panel

JF1 contains header pins for various control panel connections. See the figure below for the pin locations and definitions of the control panel buttons and LED indicators.

All JF1 wires have been bundled into a single cable to simplify this connection. Make sure the red wire plugs into pin 1 as marked on the motherboard. The other end connects to the control panel PCB board.

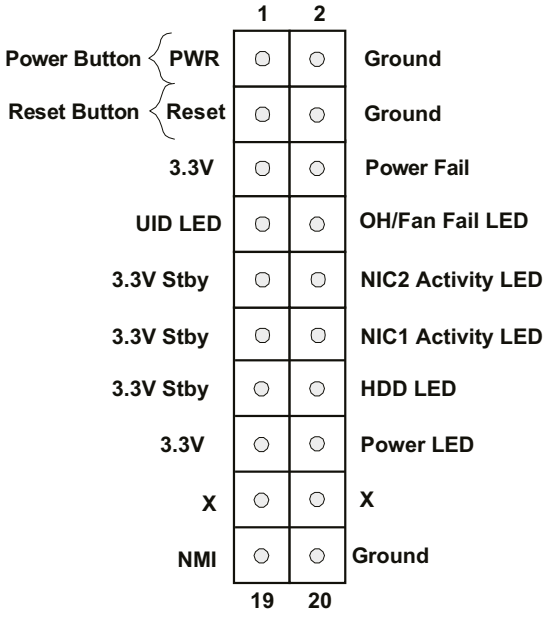

Figure 4-1. JF1: Control Panel Pins

Power Button

The Power Button connection is located on pins 1 and 2 of JF1. Momentarily contacting both pins will power on/off the system. This button can also be configured to function as a suspend button (with a setting in the BIOS - see Chapter 4). To turn off the power when the system is in suspend mode, press the button for 4 seconds or longer. Refer to the table below for pin definitions.

Power Button Pin Definitions (JF1)

Pins	Definition
1	Signal
2	Ground

WIT Company – поставка серверов, СХД, сетевого оборудования, лицензионного ПО WIT.RU

Reset Button

The Reset Button connection is located on pins 3 and 4 of JF1. Attach it to a hardware reset switch on the computer case to reset the system. Refer to the table below for pin definitions.

Reset Button Pin Definitions (JF1)	
Pins	**Definition**
3	Reset
4	Ground

Power Fail LED

The Power Fail LED connection is located on pins 15 and 16 of JF1. Refer to the table below for pin definitions.

Power LED Pin Definitions (JF1)	
Pins	**Definition**
5	+3.3V
6	Power Fail LED

Fan Fail and UID LED

Connect an LED cable to pins 7 and 8 of the front control panel to use the Overheat/Fan Fail LED connections. The LED on pin 8 provides warnings of overheat or fan failure. Refer to the tables below for pin definitions.

OH/Fan Fail Indicator Status	
State	**Definition**
Off	Normal
On	Overheat
Flashing	Fan Fail

OH/Fan Fail LED Pin Definitions (JF1)	
Pin#	**Definition**
7	Blue LED
8	OH/Fan Fail LED

NIC1/NIC2 (LAN1/LAN2)

The NIC (Network Interface Controller) LED connection for LAN port 1 is located on pins 11 and 12 of JF1, and the LED connection for LAN Port 2 is on pins 9 and 10. Attach NIC LED cables to NIC1 and NIC2 LED indicators to display network activities. Refer to the table below for pin definitions.

LAN1/LAN2 LED Pin Definitions (JF1)	
Pins	**Definition**
9/11	+3.3V
10/12	NIC Activity LED

WIT Company – поставка серверов, СХД, сетевого оборудования, лицензионного ПО WIT.RU

HDD LED

The HDD LED connection is located on pins 13 and 14 of JF1. Attach a cable to pin 14 to show hard drive activity status. Refer to the table below for pin definitions.

HDD LED Pin Definitions (JF1)

Pins	Definition
13	3.3V Stdby
14	HDD Active

Power LED

The Power LED connection is located on pins 15 and 16 of JF1. Refer to the table below for pin definitions.

Power LED Pin Definitions (JF1)

Pins	Definition
15	+3.3V
16	PWR LED

NMI Button

The non-maskable interrupt (NMI) button header is located on pins 19 and 20 of JF1. Refer to the table below for pin definitions.

NMI Button Pin Definitions (JF1)

Pins	Definition
19	Control
20	Ground

WIT Company – поставка серверов, СХД, сетевого оборудования, лицензионного ПО WIT.RU

4.3 Ports

Rear I/O Ports

See the figure below for the locations and descriptions of the various I/O ports on the rear of the motherboard.

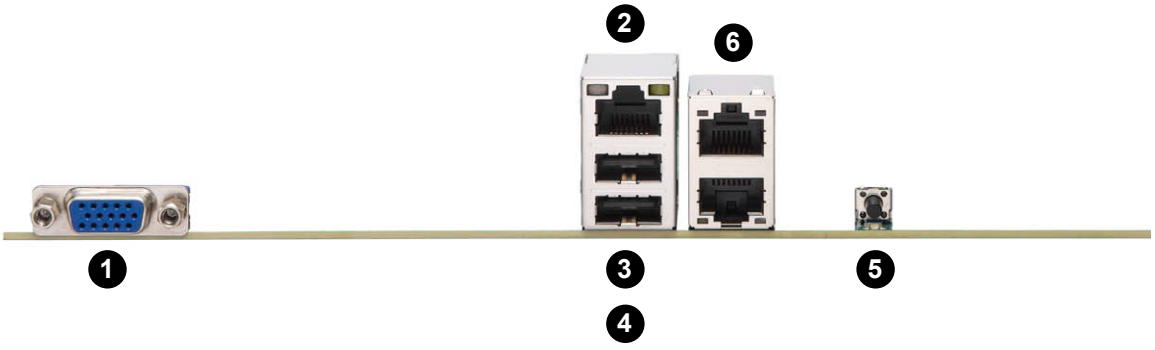

Figure 4-2. Rear I/O Ports

Rear I/O Ports			
No.	**Description**	**No.**	**Description**
1	VGA port	4	USB0 (2.0)
2	Dedicated IPMI LAN	5	Unit Identifier Switch
3	USB1 (2.0)	6	LAN1/2

VGA Port

The onboard VGA port is located next to IPMI LAN port on the I/O back panel. Use this connection for VGA display.

Universal Serial Bus (USB) Ports

There are two USB 2.0 ports (USB0/1) on the I/O back panel.

Back Panel USB 0/1 (3.0) Pin Definitions			
Pin#	**Definition**	**Pin#**	**Definition**
1	+5V	5	+5V
2	USB_N	6	USB_N
3	USB_P	7	USB_P
4	Ground	8	Ground

Ethernet Ports

Two LAN ports (LAN1/LAN2) and a dedicated IPMI LAN port are located on the I/O back panel. The IPMI LAN is supported by the onboard AST 2500 BMC and accepts an RJ45 type cable. Refer to the LED Indicator Section for LAN LED information.

WIT Company – поставка серверов, СХД, сетевого оборудования, лицензионного ПО WIT.RU

4.4 Jumpers

Explanation of Jumpers

To modify the operation of the motherboard, jumpers are used to choose between optional settings. Jumpers create shorts between two pins to change the function associated with it. Pin 1 is identified with a square solder pad on the printed circuit board. See the motherboard layout page for jumper locations.

Note: On a two-pin jumper, "Closed" means the jumper is on both pins and "Open" indicates the jumper is either on only one pin or has been completely removed.

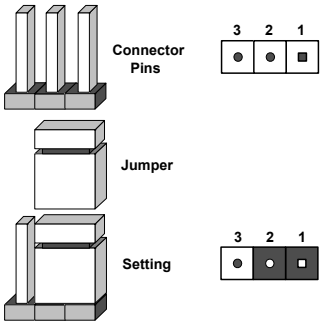

CMOS Clear

JBT1 is used to clear CMOS, which will also clear any passwords. Instead of pins, this jumper consists of contact pads to prevent accidentally clearing the contents of CMOS.

To Clear CMOS

1. First power down the system and unplug the power cord(s).
2. Remove the cover of the chassis to access the motherboard.
3. Remove the onboard battery from the motherboard.
4. Short the CMOS pads with a metal object such as a small screwdriver for at least four seconds.
5. Remove the screwdriver (or shorting device).
6. Replace the cover, reconnect the power cord(s) and power on the system.

Notes: Clearing CMOS will also clear all passwords.

Do not use the PW_ON connector to clear CMOS.

WIT Company – поставка серверов, СХД, сетевого оборудования, лицензионного ПО WIT.RU

VGA Enable/Disable

JPG1 allows you to enable or disable the VGA port using the onboard graphics controller. The default setting is Enabled.

VGA Enable/Disable Jumper Settings	
Jumper Setting	**Definition**
Pins 1-2	Enabled
Pins 2-3	Disabled

Manufacturing Mode

Close JPME2 to bypass SPI flash security and force the system to use the Manufacturing Mode, which will allow you to flash the system firmware from a host server to modify system settings. See the table below for jumper settings.

Manufacturing Mode Select Jumper Settings	
Jumper Setting	**Definition**
Pins 1-2	Normal (Default)
Pins 2-3	Manufacturing Mode

I²C Bus for VRM

Jumpers JVRM1 and JVRM2 allow the BMC or the PCH to access CPU and memory VRM controllers. See the table below for jumper settings.

VRM Jumper Settings	
Jumper Setting	**Definition**
Pins 1-2	BMC (Normal)
Pins 2-3	PCH

WIT Company – поставка серверов, СХД, сетевого оборудования, лицензионного ПО WIT.RU

4.5 LED Indicators

BMC Heartbeat LED

LEDM1 is the BMC heartbeat LED. When the LED is blinking green, BMC is functioning normally. See the table below for the LED status.

Onboard Power LED Indicator	
LED Color	**Definition**
Green: Blinking	BMC Normal

Unit ID LED

A rear UID LED indicator at UID_LED1 is located near the UID switch on the back panel. This UID indicator provides easy identification of a system.that may need service.

UID LED LED Indicator	
LED Color	**Definition**
Blue: On	Unit Identified

IPMI LAN LEDs

A dedicated IPMI LAN, located on the back panel, has two LED indicators. The amber LED on the right of the IPMI LAN port indicates activity, while the LED on the left indicates the speed of the connection. See the table below for more information.

IPMI LAN LEDs		
	Color/State	**Definition**
Link (left)	Green: Solid Amber: Solid	100 Mbps 1Gbps
Activity (Right)	Amber: Blinking	Active

WIT Company – поставка серверов, СХД, сетевого оборудования, лицензионного ПО WIT.RU

Chapter 5

Software

After the hardware has been installed, you can install the Operating System (OS), configure RAID settings and install the drivers.

5.1 Microsoft Windows OS Installation

If you will be using RAID, you must configure RAID settings before installing the Windows OS and the RAID driver. Refer to the RAID Configuration User Guides posted on our website at www.supermicro.com/support/manuals.

Installing the OS

1. Create a method to access the MS Windows installation ISO file. That might be a DVD, perhaps using an external USB/SATA DVD drive, or a USB flash drive, or the IPMI KVM console.

2. Retrieve the proper RST/RSTe driver. Go to the Supermicro web page for your motherboard and click on "Download the Latest Drivers and Utilities", select the proper driver, and copy it to a USB flash drive.

3. Boot from a bootable device with Windows OS installation. You can see a bootable device list by pressing **F11** during the system startup.

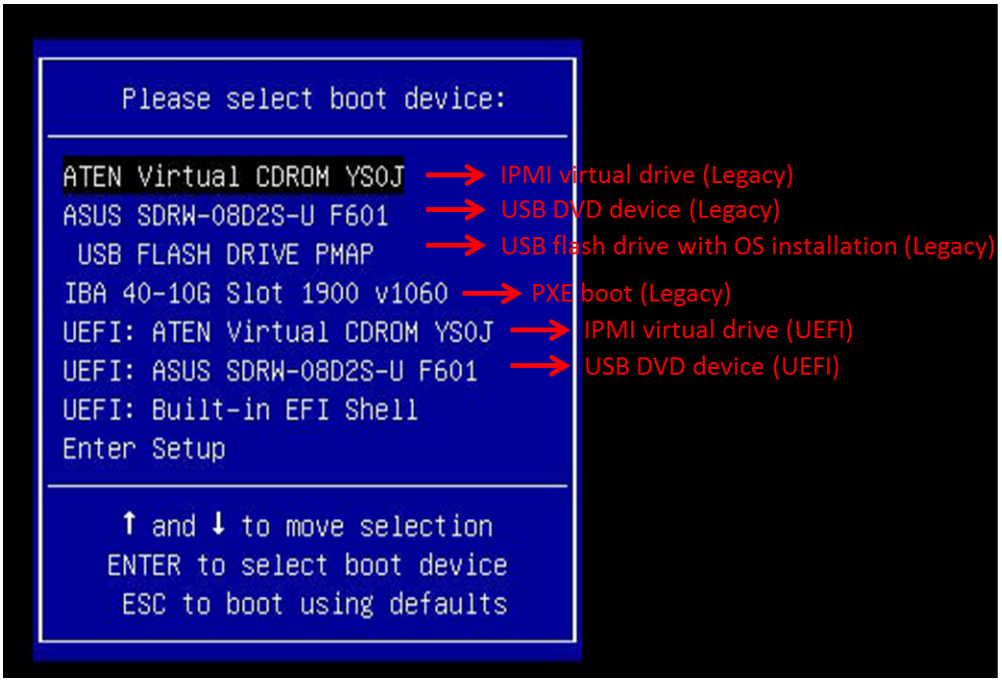

Figure 5-1. Select Boot Device

WIT Company – поставка серверов, СХД, сетевого оборудования, лицензионного ПО WIT.RU

4. During Windows Setup, continue to the dialog where you select the drives on which to install Windows. If the disk you want to use is not listed, click on “Load driver” link at the bottom left corner.

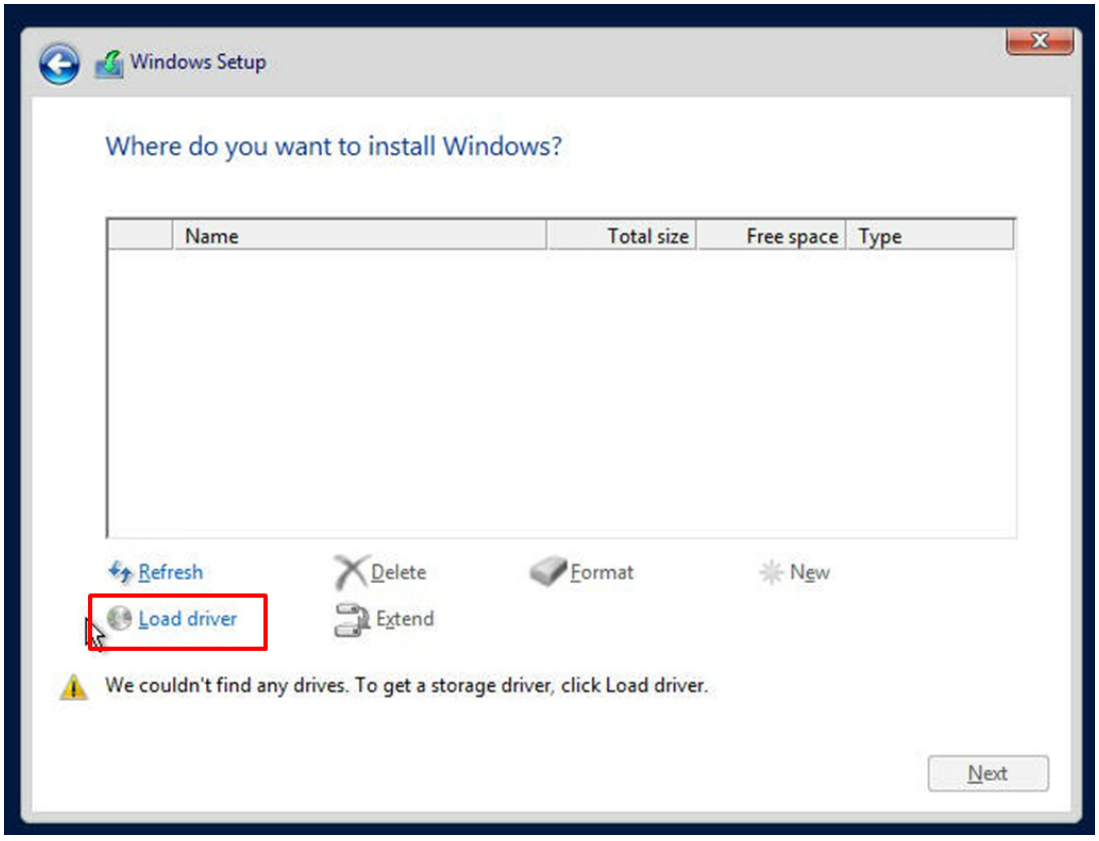

Figure 5-2. Load Driver Link

To load the driver, browse the USB flash drive for the proper driver files.

- For RAID, choose the SATA/sSATA RAID driver indicated then choose the storage drive on which you want to install it.
- For non-RAID, choose the SATA/sSATA AHCI driver indicated then choose the storage drive on which you want to install it.

5. Once all devices are specified, continue with the installation.
6. After the Windows OS installation has completed, the system will automatically reboot multiple times.

WIT Company – поставка серверов, СХД, сетевого оборудования, лицензионного ПО WIT.RU

5.2 Driver Installation

The Supermicro website contains drivers and utilities for your system at https://www.supermicro.com/wftp/driver. Some of these must be installed, such as the chipset driver.

After accessing the website, go into the CDR_Images (in the parent directory of the above link) and locate the ISO file for your motherboard. Download this file to to a USB flash drive or a DVD. (You may also use a utility to extract the ISO file if preferred.)

Another option is to go to the Supermicro website at http://www.supermicro.com/products/. Find the product page for your motherboard, and "Download the Latest Drivers and Utilities".

Insert the flash drive or disk and the screenshot shown below should appear.

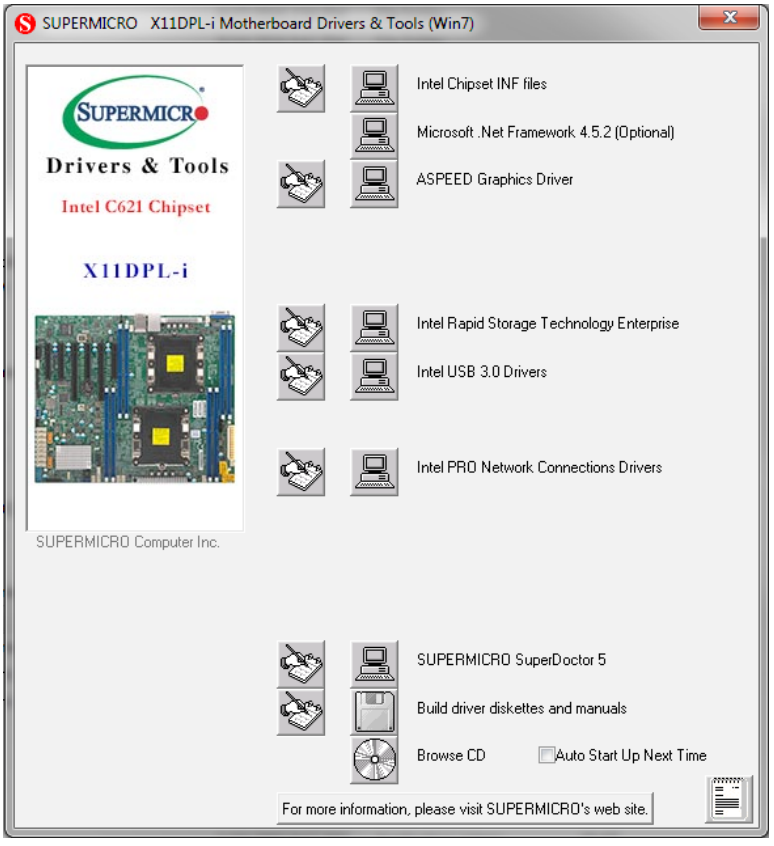

Figure 5-3. Driver & Tool Installation Screen

Note: Click the icons showing a hand writing on paper to view the readme files for each item. Click the computer icons to the right of these items to install each item (from top to the bottom) one at a time. **After installing each item, you must re-boot the system before moving on to the next item on the list.** The bottom icon with a CD on it allows you to view the entire contents.

WIT Company – поставка серверов, СХД, сетевого оборудования, лицензионного ПО WIT.RU

5.3 SuperDoctor® 5

The Supermicro SuperDoctor 5 is a program that functions in a command-line or web-based interface for Windows and Linux operating systems. The program monitors such system health information as CPU temperature, system voltages, system power consumption, fan speed, and provides alerts via email or Simple Network Management Protocol (SNMP).

SuperDoctor 5 comes in local and remote management versions and can be used with Nagios to maximize your system monitoring needs. With SuperDoctor 5 Management Server (SSM Server), you can remotely control power on/off and reset chassis intrusion for multiple systems with SuperDoctor 5 or IPMI. SuperDoctor 5 Management Server monitors HTTP, FTP, and SMTP services to optimize the efficiency of your operation.

Note: The default User Name and Password for SuperDoctor 5 is ADMIN / ADMIN.

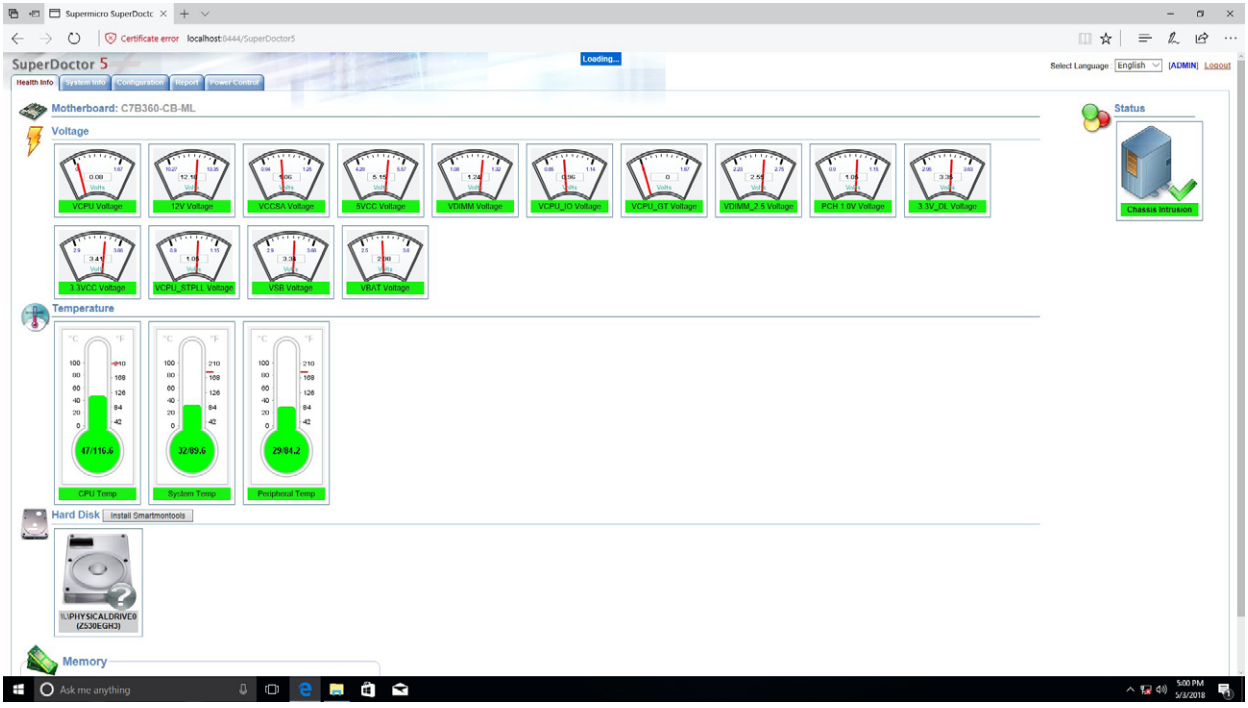

Figure 5-4. SuperDoctor 5 Interface Display Screen (Health Information)

WIT Company – поставка серверов, СХД, сетевого оборудования, лицензионного ПО WIT.RU

5.4 IPMI

The X11DPL-i supports the Intelligent Platform Management Interface (IPMI). IPMI is used to provide remote access, monitoring and management. There are several BIOS settings that are related to IPMI.

For general documentation and information on IPMI, please visit our website at: http://www.supermicro.com/products/nfo/IPMI.cfm.

WIT Company – поставка серверов, СХД, сетевого оборудования, лицензионного ПО WIT.RU

Chapter 6

BIOS

6.1 Introduction

This chapter describes the AMIBIOS™ Setup utility for the motherboard. The BIOS is stored on a chip and can be easily upgraded using a flash program.

Note: Due to periodic changes to the BIOS, some settings may have been added or deleted and might not yet be recorded in this manual. Please refer to the Manual Download area of our website for any changes to BIOS that may not be reflected in this manual.

Starting the Setup Utility

To enter the BIOS Setup Utility, hit the <Delete> key while the system is booting-up. (In most cases, the <Delete> key is used to invoke the BIOS setup screen. There are a few cases when other keys are used, such as <F1>, <F2>, etc.) Each main BIOS menu option is described in this manual.

The Main BIOS screen has two main frames. The left frame displays all the options that can be configured. “Grayed-out” options cannot be configured. The right frame displays the key legend. Above the key legend is an area reserved for a text message. When an option is selected in the left frame, it is highlighted in white. Often a text message will accompany it. (Note that BIOS has default text messages built in. We retain the option to include, omit, or change any of these text messages.) Settings printed in **Bold** are the default values.

A " ▶" indicates a submenu. Highlighting such an item and pressing the <Enter> key will open the list of settings within that submenu.

The BIOS setup utility uses a key-based navigation system called hot keys. Most of these hot keys (<F1>, <F2>, <F3>, <Enter>, <ESC>, <Arrow> keys, etc.) can be used at any time during the setup navigation process.

WIT Company – поставка серверов, СХД, сетевого оборудования, лицензионного ПО WIT.RU

6.2 Main Setup

When you first enter the AMI BIOS setup utility, you will enter the Main setup screen. You can always return to the Main setup screen by selecting the Main tab on the top of the screen. The Main BIOS setup screen is shown below. The following Main menu items will be displayed:

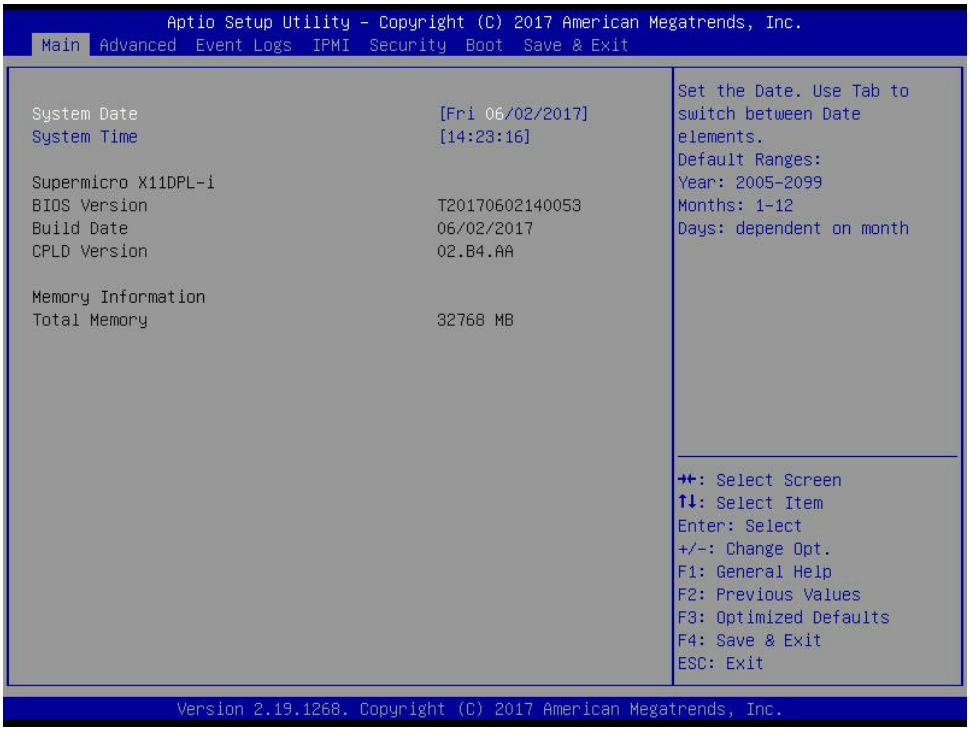

System Date/System Time

Use this option to change the system date and time. Highlight *System Date* or *System Time* using the arrow keys. Enter new values using the keyboard. Press the <Tab> key or the arrow keys to move between fields. The date must be entered in MM/DD/YYYY format. The time is entered in HH:MM:SS format.

Note: The time is in the 24-hour format. For example, 5:30 P.M. appears as 17:30:00. The date's default value is 01/01/2015 after RTC reset.

Supermicro X11DPL-i

BIOS Version

This item displays the version of the BIOS ROM used in the system.

Build Date

This item displays the date when the version of the BIOS ROM used in the system was built.

WIT Company – поставка серверов, СХД, сетевого оборудования, лицензионного ПО WIT.RU

Memory Information

Total Memory

This item displays the total size of memory available in the system.

WIT Company – поставка серверов, СХД, сетевого оборудования, лицензионного ПО WIT.RU

6.3 Advanced Setup Configurations

Use the arrow keys to select Boot Setup and press <Enter> to access the submenu items.

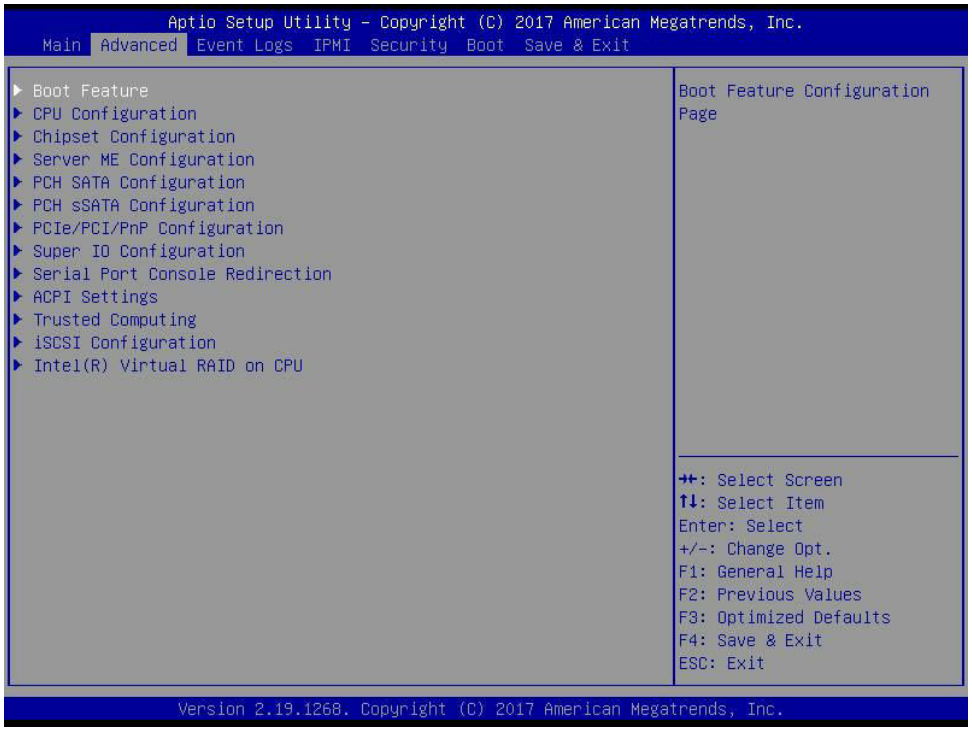

Warning: Take caution when changing the Advanced settings. An incorrect value, a very high DRAM frequency, or an incorrect DRAM timing setting may make the system unstable. When this occurs, revert to the default to the manufacture default settings.

▶Boot Feature

Quiet Boot

Use this feature to select the screen display between the POST messages and the OEM logo upon bootup. Select Disabled to display the POST messages. Select Enabled to display the OEM logo instead of the normal POST messages. The options are Disabled and **Enabled**.

Option ROM Messages

Use this feature to set the display mode for the Option ROM. Select Keep Current to display the current AddOn ROM setting. Select Force BIOS to use the Option ROM display set by the system BIOS. The options are **Force BIOS** and Keep Current.

Bootup NumLock State

Use this feature to set the Power-on state for the <Numlock> key. The options are **On** and Off.

WIT Company – поставка серверов, СХД, сетевого оборудования, лицензионного ПО WIT.RU

Wait For "F1" If Error

Use this feature to force the system to wait until the 'F1' key is pressed if an error occurs. The options are Disabled and **Enabled**.

INT19 (Interrupt 19) Trap Response

Interrupt 19 is the software interrupt that handles the boot disk function. When this item is set to Immediate, the ROM BIOS of the host adaptors will "capture" Interrupt 19 at bootup immediately and allow the drives that are attached to these host adaptors to function as bootable disks. If this item is set to Postponed, the ROM BIOS of the host adaptors will not capture Interrupt 19 immediately and allow the drives attached to these adaptors to function as bootable devices at bootup. The options are **Immediate** and Postponed.

Re-try Boot

If this item is enabled, the BIOS will automatically reboot the system from a specified boot device after its initial boot failure. The options are **Disabled**, Legacy Boot, and EFI Boot.

Install Windows 7 USB Support

Enable this feature to use the USB keyboard and mouse during the Windows 7 installation, since the native XHCI driver support is unavailable. Use a SATA optical drive as a USB drive, and USB CD/DVD drives are not supported. Disable this feature after the XHCI driver has been installed in Windows. The options are **Disabled** and Enabled.

Port 61h Bit-4 Emulation

Select Enabled to enable the emulation of Port 61h bit-4 toggling in SMM (System Management Mode). The options are **Disabled** and Enabled.

▶Power Configuration

Watch Dog Function

If enabled, the Watch Dog Timer will allow the system to reset or generate NMI based on jumper settings when it is expired for more than five minutes. The options are **Disabled** and Enabled**.**

Restore on AC Power Loss

Use this feature to set the power state after a power outage. Select Stay Off for the system power to remain off after a power loss. Select Power On for the system power to be turned on after a power loss. Select Last State to allow the system to resume its last power state before a power loss. The options are Stay Off, Power On, and **Last State**.

WIT Company – поставка серверов, СХД, сетевого оборудования, лицензионного ПО WIT.RU

Power Button Function

This feature controls how the system shuts down when the power button is pressed. Select 4 Seconds Override for the user to power off the system after pressing and holding the power button for 4 seconds or longer. Select Instant Off to instantly power off the system as soon as the user presses the power button. The options are **Instant Off** and 4 Seconds Override**.**

Throttle on Power Fail

This feature allows the system to decrease system power requirements by throttling CPU frequency in the event of one power supply failing.

▶CPU Configuration

Processor Configuration

The following CPU information will display:

- Processor BSP Revision
- Processor Socket
- Processor ID
- Processor Frequency
- Processor Max Ratio
- Processor Min Ratio
- Microcode Revision
- L1 Cache RAM
- L2 Cache RAM
- L3 Cache RAM
- Processor 0 Version
- Processor 1 Version

Hyper-Threading (ALL) (Available when supported by the CPU)

Select Enable to support Intel Hyper-threading Technology to enhance CPU performance. The options are Disable and **Enable**.

WIT Company – поставка серверов, СХД, сетевого оборудования, лицензионного ПО WIT.RU

Execute Disable Bit (Available if supported by the OS & the CPU)

Select Enabled to enable the Execute-Disable Bit which will allow the processor to designate areas in the system memory where an application code can execute and where it cannot, thus preventing a worm or a virus from flooding illegal codes to overwhelm the processor or damage the system during an attack. The default is **Enable**. (Refer to the Intel® and Microsoft® websites for more information.)

Intel Virtualization Technology

Use feature to enable the Vanderpool Technology. This technology allows the system to run several operating systems simultaneously. The options are Disable and **Enable**.

PPIN Control

Select Unlock/Enable to use the Protected-Processor Inventory Number (PPIN) in the system. The options are Unlock/Disable and **Unlock/EnablE**

Hardware Prefetcher (Available when supported by the CPU)

If set to Enabled, the hardware prefetcher will prefetch streams of data and instructions from the main memory to the L2 cache to improve CPU performance. The options are Disable and **Enable**.

Adjacent Cache Prefetch (Available when supported by the CPU)

The CPU prefetches the cache line for 64 bytes if this feature is set to Disabled. The CPU prefetches both cache lines for 128 bytes as comprised if this feature is set to **Enable**.

DCU Streamer Prefetcher (Available when supported by the CPU)

Select Enabled to enable the DCU (Data Cache Unit) Streamer Prefetcher which will stream and prefetch data and send it to the Level 1 data cache to improve data processing and system performance. The options are Disable and **Enable**.

DCU IP Prefetcher (Available when supported by the CPU)

Select Enabled for DCU (Data Cache Unit) IP Prefetcher support, which will prefetch IP addresses to improve network connectivity and system performance. The options are **Enable** and Disable.

LLC Prefetch

If set to Enabled, the hardware prefetcher will prefetch streams of data and instructions from the main memory to the L3 cache to improve CPU performance. The options are Disable and **Enable**.

Extended APIC

Select Enable to activate APIC (Advanced Programmable Interrupt Controller) support. The options are Disable and **Enable**.

WIT Company – поставка серверов, СХД, сетевого оборудования, лицензионного ПО WIT.RU

AES-NI

Select Enable to use the Intel Advanced Encryption Standard (AES) New Instructions (NI) to ensure data security. The options are Disable and **Enable**.

▶Advanced Power Management Configuration

▶CPU P State Control

This feature allows the user to configure the following CPU power settings

Speedstep (Pstates)

Intel SpeedStep Technology allows the system to automatically adjust processor voltage and core frequency to reduce power consumption and heat dissipation. The options are Disabled and **Enabled**.

EIST PSD Funtion

This feature allows the user to choose between Hardware and Software to control the processor's frequency and performance (P-state). In HW_ALL mode, the processor hardware is responsible for coordinating the P-state, and the OS is responsible for keeping the P-state request up to date on all logical processors. In SW_ALL mode, the OS Power Manager is responsible for coordinating the P-state, and must initiate the transition on all Logical Processors. In SW_ANY mode, the OS Power Manager is responsible for coordinating the P-state and may initiate the transition on any Logical Processors.

Options available: HW_ALL/SW_ALL/SW_ANY. Default setting is HW_ALL.

Turbo Mode

This feature will enable dynamic control of the processor, allowing it to run above stock frequency.

▶Hardware PM State Control

Hardware P-States

This setting allows the user to select between OS and hardware-controlled P-states. Selecting Native Mode allows the OS to choose a P-state. Selecting Out of Band Mode allows the hardware to autonomously choose a P-state without OS guidance. Selecting Native Mode with No Legacy Support functions as Native Mode with no support for older hardware.

▶CPU C State Control

Autonomous Core C-State

Enabling this setting allows the hardware to autonomously choose to enter a C-state based on power consumption and clock speed.

WIT Company – поставка серверов, СХД, сетевого оборудования, лицензионного ПО WIT.RU

CPU C6 Report

Select Enabled to allow the BIOS to report the CPU C6 State (ACPI C3) to the operating system. During the CPU C6 State, the power to all cache is turned off. The options are Disable and **Enable**.

Enhanced Halt State (C1E)

Select Enabled to use Enhanced Halt-State technology, which will significantly reduce the CPU's power consumption by reducing the CPU's clock cycle and voltage during a Halt-state. The options are Disable and **Enable**.

▶Package C State Control

Package C State

This feature allows the user to set the limit on the C State package register. The options are C0/C1 State, C2 State, C6 (Non Retention) State**,** C6 (Retention) state, No Limit, and **Auto.**

▶CPU T State Control

Software Controlled T-States

Enabling this feature allows the OS to choose a T-State. The options are Enable and **Disable**.

▶Chipset Configuration

Warning: Setting the wrong values in the following features may cause the system to malfunction.

▶North Bridge

This feature allows the user to configure the following North Bridge settings.

▶UPI Configuration

▶UPI General Configuration

UPI Status

WIT Company – поставка серверов, СХД, сетевого оборудования, лицензионного ПО WIT.RU

The following UPI information will display:

- Number of CPU
- Number of IIO
- Current UPI Link Speed
- Current UPI Link Frequency
- UPI Global MMIO Low Base / Limit
- UPI Global MMIO High Base / Limit
- UPI Pci-e Congfiguration Base / Size

Degrade Precedence

Use this feature to set degrade precedence when system settings are in conflict. Select Topology Precedence to degrade Features. Select Feature Precedence to degrade Topology. The options are Topology Precedence and Feature Precedence.Link L0p Enable

Select Enable for Link L0p support. The options are **Enable** and Disable.

Link L1 Enable

Select Enable for Link L1 support. The options are **Enable** and Disable.

IO Directory Cache (IODC)

IO Directory Cache is an 8-entry cache that stores the directory state of remote IIO writes and memory lookups, and saves directory updates. Use this feature to lower cache to cache (C2C) transfer latencies. The options are Disable, **Auto**, Enable for Remote InvItoM Hybrid Push, InvItoM AllocFlow, Enable for Remote InvItoM Hybrid AllocNonAlloc, and Enable for Remote InvItoM and Remote WViLF.

Isoc Mode

Select Enabled for Isochronous support to meet QoS (Quality of Service) requirements. This feature is especially important for Virtualization Technology. The options are Enable and **Disable**.

WIT Company – поставка серверов, СХД, сетевого оборудования, лицензионного ПО WIT.RU

▶Memory Configuration

Enforce POR

Select Enable to enforce POR restrictions on DDR4 frequency and voltage programming. The options are **Enabled** and Disable.

Memory Frequency

Use this feature to set the maximum memory frequency for onboard memory modules. The options are **Auto**, 1333, 1400, 1600, 1800, 1867, 2000, 2133, 2200, and 2400.

Data Scrambling for NVDIMM

Use this festure to enable or disable data scrambling for non-volatile DIMM (NVDIMM) memory. The options are **Auto**, Disable, and Enable.

Data Scrambling for DDR4

Use this festure to enable or disable data scrambling for DDR4 memory. The options are **Auto**, Disable, and Enable.

tCCD_L Relaxation

If Enabled, the tCCD_L overrides the SPD. When disabled, it is enforced based on memory frequency. The options are Enable and **Disable**.

Enable ADR

Select Enable for ADR (Automatic Diagnostic Repository) support to enhance memory performance. The options are Disable and **Enable.**

2X REFRESH

This option allows the user to select 2X refresh mode. The options are **Auto**, Enabled, and Disabled.

▶Memory Topology

This feature displays DIMM population information.

▶Memory RAS Configuration

Static Virtual Lockstep Mode

Select Enable to run the system's memory channels in lockstep mode to minimize memory access latency. The options are **Disable** and Enable.

WIT Company – поставка серверов, СХД, сетевого оборудования, лицензионного ПО WIT.RU

Mirror Mode

This feature allows memory to be mirrored between two channels, providing 100% redundancy.

UEFI ARM Mirror

This options allows the system to imitate the behavior of the UEFI based Address Range Mirror with setup option. The options are **Disable** and Enable.

Memory Rank Sparing

Select Enable to enable memory-sparing support for memory ranks to improve memory performance. The options are **Disable** and Enable.

Correctable Error Threshold

Use this item to specify the threshold value for correctable memory-error logging, which sets a limit on the maximum number of events that can be logged in the memory-error log at a given time. The default setting is **10**.

SDDC

Single device data correction (SDDC) organizes data in a single bundle (x4/x8 DRAM). If any or all the bits become corrupted, corrections occur. The x4 condition is corrected on all cases. The x8 condition is corrected only if the system is in Lockstep Mode.

ADDDC Sparing

Adaptive Double Device Data Correction (ADDDC) Sparing detects when the predetermined threshold for correctable errors is reached, copying the contents of the failing DIMM to spare memory. The failing DIMM or memory rank will then be disabled. The options are **Disable** and Enable.

Patrol Scrub

Patrol Scrubbing is a process that allows the CPU to correct correctable memory errors detected on a memory module and send the correction to the requestor (the original source). When this item is set to Enable, the IO hub will read and write back one cache line every 16K cycles, if there is no delay caused by internal processing. By using this method, roughly 64 GB of memory behind the IO hub will be scrubbed every day. The options are Disable and **Enable**.

Patrol Scrub Interval

This feature allows you to decide how many hours the system should wait before the next complete patrol scrub is performed. Use the keyboard to enter a value from 0-24. The default setting is **24**.

WIT Company – поставка серверов, СХД, сетевого оборудования, лицензионного ПО WIT.RU

▶IIO Configuration

EV DFX Features

▶CPU1 Configuration

IOU0 (II0 PCIe Br1)

This item configures the PCI-E port Bifuraction setting for a PCI-E port specified by the user. The options are x4x4x4x4, x4x4x8, x8x4x4, x8x8, x16, and **Auto**.

IOU1 (II0 PCIe Br2)

This item configures the PCI-E port Bifuraction setting for a PCI-E port specified by the user. The options are x4x4x4x4, x4x4x8, x8x4x4, x8x8, x16, and **Auto**.

IOU2 (II0 PCIe Br3)

This item configures the PCI-E port Bifuraction setting for a PCI-E port specified by the user. The options are x4x4x4x4, x4x4x8, x8x4x4, x8x8, x16, and **Auto**.

▶CPU SLOT6 PCI-E 3.0 X8 / CPU SLOT4 PCI-E X8 / CPU SLOT5 3.0 PCI-E X16 / CPU SLOT2 PCI-E 3.0 X8 / CPU SLOT1 PCI-E 3.0 X4

Link Speed

Use this item to select the link speed for the PCI-E port specified by the user. The options are **Auto,** Gen 1 (2.5 GT/s), Gen 2 (5 GT/s), and Gen 3 (8 GT/s).

PCI-E Port Max Payload Size

Selecting **Auto** for this feature will enable the motherboard to automatically detect the maximum Transaction Layer Packet (TLP) size for the connected PCI-E device, allowing for maximum I/O efficiency. Selecting 128B or 256B will designate maximum packet size of 128 or 256. Options are **Auto**, 128, and 256. **Auto** is enabled by default.

▶CPU2 Configuration

IOU2 (II0 PCIe Br3)

This item configures the PCI-E port Bifuraction setting for a PCI-E port specified by the user. The options are x4x4x4x4, x4x4x8, x8x4x4, x8x8, x16, and **Auto.**

WIT Company – поставка серверов, СХД, сетевого оборудования, лицензионного ПО WIT.RU

▶CPU SLOT3 PCI-E 3.0 X16

Link Speed

Use this item to select the link speed for the PCI-E port specified by the user. The options are **Auto,** Gen 1 (2.5 GT/s), Gen 2 (5 GT/s), and Gen 3 (8 GT/s).

PCI-E Port Max Payload Size

Selecting **Auto** for this feature will enable the motherboard to automatically detect the maximum Transaction Layer Packet (TLP) size for the connected PCI-E device, allowing for maximum I/O efficiency. Selecting 128B or 256B will designate maximum packet size of 128 or 256. Options are **Auto**, 128, and 256. **Auto** is enabled by default.

▶IOAT Configuration

Disable TPH

Transparent Hugepages is a Linux memory management system that enables communication in larger blocks (pages). Enabling this feature will increase performance. The options are **No** and Yes.

Prioritize TPH

Use this feature to enable Prioritize TPH support. The options are Enable and **Disable.**

Relaxed Ordering

Select Enable to enable Relaxed Ordering support which will allow certain transactions to violate the strict-ordering rules of PCI bus for a transaction to be completed prior to other transactions that have already been enqueued. The options are **Disable** and Enable.

▶Intel® VT for Directed I/O (VT-d)

Intel® VT for Directed I/O (VT-d)

Select Enable to use Intel Virtualization Technology for Direct I/O VT-d support by reporting the I/O device assignments to the VMM (Virtual Machine Monitor) through the DMAR ACPI tables. This feature offers fully-protected I/O resource sharing across Intel platforms, providing greater reliability, security and availability in networking and data-sharing. The options are Disabled and **Enabled**.

Interrupt Remapping

Select Enable for Interrupt Remapping support to enhance system performance. The options are **Enable** and **Disable.**

WIT Company – поставка серверов, СХД, сетевого оборудования, лицензионного ПО WIT.RU

PassThrough DMA

Use this feature to allow devices such as network cards to access the system memory without using a processor. Select Enable to use the Non-Isoch VT_D Engine Pass Through Direct Memory Access (DMA) support. The options are **Enable** and Disable.

ATS

Use this feature to enable Non-Isoch VT-d Engine Address Translation Services (ATS) support. ATS translates virtual addresses to physical addresses. The options are **Enable** and Disable.

Posted Interrupt

Use this feature to enable VT_D Posted Interrupt. The options are **Enable** and Disable.

Coherency Support (Non-Isoch)

Use this feature to maintain setting coherency between processors or other devices. Select Enable for the Non-Iscoh VT-d engine to pass through DMA to enhance system performance. The options are **Enable** and Disable.

▶Intel® VMD Technology

▶Intel® VMD for Volume Management Device on CPU1

VMD Config for PStack0

Intel® VMD for Volume Management Device

Select Enable to use the Intel Volume Management Device Technology for this stack. The options are **Disable** and Enable.

If the item "Intel VMD for Volume Management Device" above is set to Enable, the following items will be dislayed:

CPU SLOT6 PCI-E 3.0 X8 VMD (Available when the device is detected by the system)

Select Enable to use the Intel Volume Management Device Technology for this specific root port. The options are **Disable** and Enable.

CPU SLOT4 PCI-E 3.0 X8 VMD (Available when the device is detected by the system)

Select Enable to use the Intel Volume Management Device Technology for this specific root port. The options are **Disable** and Enable.

WIT Company – поставка серверов, СХД, сетевого оборудования, лицензионного ПО WIT.RU

Hot Plug Capable (Available when the device is detected by the system)

Use this feature to enable hot plug support for PCIe root ports 1A~1D. The options are **Disable** and Enable.

VMD Config for PStack1

Intel® VMD for Volume Management Device

Select Enable to use the Intel Volume Management Device Technology for this stack. The options are **Disable** and Enable.

If the item "Intel VMD for Volume Management Device" above is set to Enable, the following items will be dislayed:

CPU SLOT5 PCI-E 3.0 X16 VMD (Available when the device is detected by the system)

Select Enable to use the Intel Volume Management Device Technology for this specific root port. The options are **Disable** and Enable.

Hot Plug Capable (Available when the device is detected by the system)

Use this feature to enable hot plug support for PCIe root ports 2A~2D. The options are **Disable** and Enable.

VMD Config for PStack2

Intel® VMD for Volume Management Device

Select Enable to use the Intel Volume Management Device Technology for this stack. The options are **Disable** and Enable.

If the item "Intel VMD for Volume Management Device" above is set to Enable, the following items will be dislayed:

CPU SLOT2 PCI-E 3.0 X8 VMD (Available when the device is detected by the system)

Select Enable to use the Intel Volume Management Device Technology for this specific root port. The options are **Disable** and Enable.

CPU SLOT1 PCI-E 3.0 X4 VMD (Available when the device is detected by the system)

Select Enable to use the Intel Volume Management Device Technology for this specific root port. The options are **Disable** and Enable.

WIT Company – поставка серверов, СХД, сетевого оборудования, лицензионного ПО WIT.RU

Hot Plug Capable (Available when the device is detected by the system)

Use this feature to enable hot plug support for PCIe root ports 3A~3D. The options are **Disable** and Enable.

▶Intel® VMD for Volume Management Device on CPU2

VMD Config for PStack2

Intel® VMD for Volume Management Device

Select Enable to use the Intel Volume Management Device Technology for this stack. The options are **Disable** and Enable.

If the item "Intel VMD for Volume Management Device" above is set to Enable, the following items will be dislayed:

CPU SLOT3 PCI-E 3.0 X16 VMD (Available when the device is detected by the system)

Select Enable to use the Intel Volume Management Device Technology for this specific root port. The options are **Disable** and Enable.

Hot Plug Capable (Available when the device is detected by the system)

Use this feature to enable hot plug support for PCIe root ports 3A~3D. The options are **Disable** and Enable.

PCI-E Completion Timeout Disable

Use this feature to enable PCI-E Completion Timeout support for electric tuning. The options are Yes, **No**, and Per-Port.

▶South Bridge

Legacy USB Support

This feature enables support for USB 2.0 and older. The options are **Enabled** and Disabled. Default setting is **Enabled**.

XHCI Hand-off

When disabled, the motherboard will not support USB 3.0. Options are Enabled and **Disabled**. Default setting is **Disabled**.

Port 60/64 Emulation

This feature allows legacy I/O support for USB devices like mice and keyboards. The options are **Enabled** and disabled. Default setting is **Enabled**.

WIT Company – поставка серверов, СХД, сетевого оборудования, лицензионного ПО WIT.RU

▶Server ME (Management Engine) Configuration

This feature displays the following system ME configuration settings.

- General ME Configuration
- Operational Firmware Version
- ME Frimware Type
- Recovery Firmware Version
- ME Firmware Features
- ME Firmware Status #1
- ME Firmware Status #2
- Current State
- Error Code

▶PCH SATA Configuration

When this submenu is selected, the AMI BIOS automatically detects the presence of the SATA devices that are supported by the Intel PCH chip and displays the following items:

SATA Controller

This item enables or disables the onboard SATA controller supported by the Intel PCH chip. The options are Disable and **Enable**.

Configure SATA as

Select IDE to configure a SATA drive specified by the user as an IDE drive. Select AHCI to configure a SATA drive specified by the user as an AHCI drive. Select RAID to configure a SATA drive specified by the user as a RAID drive. The options are IDE, **AHCI**, and RAID.

SATA HDD Unlock

This feature allows the user to remove any password-protected SATA disk drives.

WIT Company – поставка серверов, СХД, сетевого оборудования, лицензионного ПО WIT.RU

Aggressive Link Power Management

When this item is set to Enabled, the SATA AHCI controller manages the power usage of the SATA link. The controller will put the link in a low power mode during extended periods of I/O inactivity, and will return the link to an active state when I/O activity resumes. The options are Disabled and **Enabled**.

If the item above "Configure SATA as" is set to RAID, the following items will display:

SATA Port 0 ~ Port 7

This item displays the information detected on the installed SATA drive on the particular SATA port.

- Model number of drive and capacity
- Software Preserve Support

Port 0 ~ Port 7 Hot Plug

Set this item to Enabled for hot-plugging support, which will allow the user to replace a SATA drive without shutting down the system. The options are Disabled and **Enabled**.

Port 0 ~ Port 6 Spin Up Device

On an edge detect from 0 to 1, set this item to allow the PCH to initialize the device. The options are **Disabled** and Enabled.

Port 0 ~ Port 6 SATA Device Type

Use this item to specify if the SATA port specified by the user should be connected to a Solid State drive or a Hard Disk Drive. The options are **Hard Disk Drive** and Solid State Drive.

▶PCH sSATA Configuration

When this submenu is selected, the AMI BIOS automatically detects the presence of the SATA devices that are supported by the Intel PCH chip and displays the following items:

sSATA Controller

This item enables or disables the onboard sSATA controller supported by the Intel PCH chip. The options are Disable and **Enable**.

Configure sSATA as

Select AHCI to configure an sSATA drive specified by the user as an AHCI drive. Select RAID to configure an sSATA drive specified by the user as a RAID drive. The options are **AHCI**, and RAID.

WIT Company – поставка серверов, СХД, сетевого оборудования, лицензионного ПО WIT.RU

SATA HDD Unlock

This feature allows the user to remove any password-protected SATA disk drives.

Aggressive Link Power Management

When this item is set to Enabled, the SATA AHCI controller manages the power usage of the SATA link. The controller will put the link in a low power mode during extended periods of I/O inactivity, and will return the link to an active state when I/O activity resumes. The options are Disabled and **Enabled**.

If the item above "Configure SATA as" is set to RAID, the following items will display:

sSATA Port 0 ~ Port 2

This item displays the information detected on the installed sSATA drive on the particular sSATA port.

- Model number of drive and capacity
- Software Preserve Support

Port 0 ~ Port 2 Hot Plug

Set this item to Enabled for hot-plugging support, which will allow the user to replace a SATA drive without shutting down the system. The options are Disabled and **Enabled**.

Port 0 ~ Port 2 Spin Up Device

On an edge detect from 0 to 1, set this item to allow the PCH to initialize the device. The options are **Disabled** and Enabled.

Port 0 ~ Port 2 SsATA Device Type

Use this item to specify if the SATA port specified by the user should be connected to a Solid State drive or a Hard Disk Drive. The options are **Hard Disk Drive** and Solid State Drive.

▶PCIe/PCI/PnP Configuration

The following information will display:

- PCI Bus Driver Version
- PCI Devices Common Settings:

WIT Company – поставка серверов, СХД, сетевого оборудования, лицензионного ПО WIT.RU

Above 4G Decoding (Available if the system supports 64-bit PCI decoding)

Select Enabled to decode a PCI device that supports 64-bit in the space above 4G Address. The options are **Disabled** and Enabled.

SR-IOV Support

Use this feature to enable or disable Single Root IO Virtualization Support. The options are **Disabled** and Enabled.

MMIOHBase

Use this item to select the base memory size according to memory-address mapping for the IO hub. The options are **56 TB**, 40 TB, 24 TB, 3 TB, 2 TB, and 1 TB.

MMIO High Granularity Size

Use this item to select the high memory size according to memory-address mapping for the IO hub. The options are **256 GB**, 128 GB, 512 GB, and 1024 GB.

PCI PERR/SERR Support

Select Enabled to allow a PCI device to generate a PERR/SERR number for a PCI Bus Signal Error Event. The options are Enabled and **Disabled**.

Maximum Read Request

Select Auto for the system BIOS to automatically set the maximum size for a read request for a PCI-E device to enhance system performance. The options are **Auto**, 128 Bytes, 256 Bytes, 512 Bytes, 1024 Bytes, 2048 Bytes, and 4096 Bytes.

MMCFG Base

Use this item to select the low base address for PCIE adapters to increase base memory. The options are 1G, 1.5G, 1.75G, **2G**, 2.25G. and 3G.

NVMe Firmware Source

Use this item to select the NVMe firmware to support booting. The options are **Vendor Defined Firmware** and AMI Native Support. The default option, Vendor Defined Firmware, is pre-installed on the drive and may resolve errata or enable innovative functions for the drive. The other option, AMI Native Support, is offered by the BIOS with a generic method.

VGA Priority

Use this item to select the graphics device to be used as the primary video display for system boot. The options are **Onboard** and Offboard.

WIT Company – поставка серверов, СХД, сетевого оборудования, лицензионного ПО WIT.RU

CPU SLOT1 PCI-E 3.0 X4 OPROM

Select Enabled to enable Option ROM support to boot the computer using a device installed on the slot specified by the user. The options are Disabled, Legacy and EFI. Use this feature to select which firmware type to be loaded for the add-on card in this slot. The options are Disabled, **Legacy**, and EFI.

CPU SLOT2 PCI-E 3.0 X8 OPROM

Use this feature to select which firmware type to be loaded for the add-on card in this slot. The options are Disabled, **Legacy**, and EFI.

CPU SLOT3 PCI-E 3.0 X16 OPROM

Use this feature to select which firmware type to be loaded for the add-on card in this slot. The options are Disabled, **Legacy**, and EFI.

CPU SLOT4 PCI-E 3.0 X8 OPROM

Use this feature to select which firmware type to be loaded for the add-on card in this slot. The options are Disabled, **Legacy**, and EFI.

CPU SLOT5 PCI-E 3.0 X16 OPROM

Use this feature to select which firmware type to be loaded for the add-on card in this slot. The options are Disabled, **Legacy**, and EFI.

CPU SLOT6 PCI-E 3.0 X8 OPROM

Use this feature to select which firmware type to be loaded for the add-on card in this slot. The options are Disabled, **Legacy**, and EFI.

M.2 PCI-E 3.0 X4 OPROM

Use this feature to select which firmware type to be loaded for the add-on card in this slot. The options are Disabled, **Legacy**, and EFI.

Onboard LAN Device

Select Enabled to enable the Onbaord LAN device. The options are **Enabled** and Disabled.

Onboard LAN1 Option ROM

Use this feature to select which firmware function to be loaded for LAN Port1 used for system boot. The options are Disabled, **Legacy**, and EFI.

Onboard LAN2 Option ROM

Use this feature to select which firmware function to be loaded for LAN Port2 used for system boot. The options are **Disabled**, Legacy, and EFI.

WIT Company – поставка серверов, СХД, сетевого оборудования, лицензионного ПО WIT.RU

Onboard NVMe1 Option ROM

Use this feature to select which firmware function to be loaded for NVMe1 used for system boot. The options are Disabled, Legacy, and **EFI**.

Onboard NVMe2 Option ROM

Use this feature to select which firmware function to be loaded for NVMe2 used for system boot. The options are Disabled, Legacy, and **EFI**.

Onboard Video Option ROM

Use this item to select the Onboard Video Option ROM type. The options are Disabled, **Legacy,** and EFI.

▶Network Stack Configuration

Network Stack

Select Enabled to enable PXE (Preboot Execution Environment) or UEFI (Unified Extensible Firmware Interface) for network stack support. The options are **Enabled** and Disabled.

IPv4 PXE Support

Select Enabled to enable IPv4 PXE boot support. The options are Disabled and **Enabled**.

IPv4 HTTP Support

Select Enabled to enable IPv4 HTTP boot support. The options are **Disabled** and Enabled.

IPv6 PXE Support

Select Enabled to enable IPv6 PXE boot support. The options are Disabled and **Enabled**.

IPv6 HTTP Support

Select Enabled to enable IPv6 HTTP boot support. The options are **Disabled** and Enabled.

PXE Boot Wait Time

Use this option to specify the wait time to press the ESC key to abort the PXE boot. Press "+" or "-" on your keyboard to change the value. The default setting is **0**.

Media Detect Count

Use this option to specify the number of times media will be checked. Press "+" or "-" on your keyboard to change the value. The default setting is **1**.

▶Super IO Configuration

The following Super IO information will display:

- Super IO Chip 2400

WIT Company – поставка серверов, СХД, сетевого оборудования, лицензионного ПО WIT.RU

▶Serial Port 1 Configuration

This submenu allows the user the configure settings of Serial Port 1.

Serial Port 1

Select Enabled to enable the selected onboard serial port. The options are Disabled and **Enabled**.

Device Settings

This item displays the status of a serial part specified by the user.

Serial Port 1 Change Settings

This feature specifies the base I/O port address and the Interrupt Request address of a serial port specified by the user. Select Auto to allow the BIOS to automatically assign the base I/O and IRQ address.

The options for Serial Port 1 are **Auto**, (IO=3F8h; IRQ=4;), (IO=3F8h; IRQ=3, 4, 5, 6, 7, 9, 10, 11, 12;), (IO=2F8h; IRQ=3, 4, 5, 6, 7, 9, 10, 11, 12;), (IO=3E8h; IRQ=3, 4, 5, 6, 7, 9, 10, 11, 12;), and (IO=2E8h; IRQ=3, 4, 5, 6, 7, 9, 10, 11, 12;).

▶SOL Configuration

This submenu allows the user to configure the settings of Serial Port 2.

SOL

Select Enabled to enable the selected onboard serial port. The options are Disabled and **Enabled**.

Device Settings

This item displays the status of a serial part specified by the user.

Change Settings

This feature specifies the base I/O port address and the Interrupt Request address of a serial port specified by the user. Select Auto to allow the BIOS to automatically assign the base I/O and IRQ address.

The options for Serial Port 2 are **Auto**, (IO=2F8h; IRQ=3;), (IO=3F8h; IRQ=3, 4, 5, 6, 7, 9, 10, 11, 12;), (IO=2F8h; IRQ=3, 4, 5, 6, 7, 9, 10, 11, 12;), (IO=3E8h; IRQ=3, 4, 5, 6, 7, 9, 10, 11, 12;), and (IO=2E8h; IRQ=3, 4, 5, 6, 7, 9, 10, 11, 12;).

SOL Attribute

Select SOL to use COM Port 2 as a Serial Over LAN (SOL) port for console . The options are **SOL** and COM.

WIT Company – поставка серверов, СХД, сетевого оборудования, лицензионного ПО WIT.RU

▶Serial Port Console Redirection

COM0 Console Redirection

Select Enabled to enable console redirection support for a serial port specified by the user. The options are Enabled and **Disabled**.

If the item above set to Enabled, the following items will become available for user's configuration:

▶COM1 Console Redirection Settings

This feature allows the user to specify how the host computer will exchange data with the client computer, which is the remote computer used by the user.

Terminal Type

This feature allows the user to select the target terminal emulation type for Console Redirection. Select VT100 to use the ASCII Character set. Select VT100+ to add color and function key support. Select ANSI to use the Extended ASCII Character Set. Select VT-UTF8 to use UTF8 encoding to map Unicode characters into one or more bytes. The options are VT100, **VT100+**, VT-UTF8, and ANSI.

Bits per second

Use this feature to set the transmission speed for a serial port used in Console Redirection. Make sure that the same speed is used in the host computer and the client computer. A lower transmission speed may be required for long and busy lines. The options are 9600, 19200, 38400, 57600 and **115200** (bits per second).

Data Bits

Use this feature to set the data transmission size for Console Redirection. The options are 7 Bits and **8 Bits**.

Parity

A parity bit can be sent along with regular data bits to detect data transmission errors. Select Even if the parity bit is set to 0, and the number of 1's in data bits is even. Select Odd if the parity bit is set to 0, and the number of 1's in data bits is odd. Select None if you do not want to send a parity bit with your data bits in transmission. Select Mark to add a mark as a parity bit to be sent along with the data bits. Select Space to add a Space as a parity bit to be sent with your data bits. The options are **None**, Even, Odd, Mark, and Space.

Stop Bits

A stop bit indicates the end of a serial data packet. Select 1 Stop Bit for standard serial data communication. Select 2 Stop Bits if slower devices are used. The options are **1** and 2.

WIT Company – поставка серверов, СХД, сетевого оборудования, лицензионного ПО WIT.RU

Flow Control

Use this feature to set the flow control for Console Redirection to prevent data loss caused by buffer overflow. Send a "Stop" signal to stop sending data when the receiving buffer is full. Send a "Start" signal to start sending data when the receiving buffer is empty. The options are **None** and Hardware RTS/CTS.

VT-UTF8 Combo Key Support

Select Enabled to enable VT-UTF8 Combination Key support for ANSI/VT100 terminals. The options are Disabled and **Enabled.**

Recorder Mode

Select Enabled to capture the data displayed on a terminal and send it as text messages to a remote server. The options are **Disabled** and Enabled.

Resolution 100x31

Select Enabled for extended-terminal resolution support. The options are Disabled and **Enabled**.

Legacy OS Redirection Resolution

Use this feature to select the number of rows and columns used in Console Redirection for legacy OS support. The options are 80x24 and **80x25**.

Putty KeyPad

This feature selects the settings for Function Keys and KeyPad used for Putty, which is a terminal emulator designed for the Windows OS. The options are **VT100**, LINUX, XTERMR6, SC0, ESCN, and VT400.

Redirection After BIOS POST

Use this feature to enable or disable legacy console redirection after BIOS POST. When set to Bootloader, legacy console redirection is disabled before booting the OS. When set to Always Enable, legacy console redirection remains enabled when booting the OS. The options are **Always Enable** and Bootloader.

SOL Console Redirection

Select Enabled to use the SOL port for Console Redirection. The options are Disabled and **Enabled.**

If the item above is set to Enabled, the following items will become available for configuration:

WIT Company – поставка серверов, СХД, сетевого оборудования, лицензионного ПО WIT.RU

▶SOL Console Redirection Settings

Use this feature to specify how the host computer will exchange data with the client computer, which is the remote computer used by the user.

Terminal Type

Use this feature to select the target terminal emulation type for Console Redirection. Select VT100 to use the ASCII Character set. Select VT100+ to add color and function key support. Select ANSI to use the Extended ASCII Character Set. Select VT-UTF8 to use UTF8 encoding to map Unicode characters into one or more bytes. The options are ANSI, VT100, **VT100+**, and VT-UTF8.

Bits Per Second

Use this feature to set the transmission speed for a serial port used in Console Redirection. Make sure that the same speed is used in the host computer and the client computer. A lower transmission speed may be required for long and busy lines. The options are 9600, 19200, 38400, 57600 and **115200** (bits per second).

Data Bits

Use this feature to set the data transmission size for Console Redirection. The options are 7 Bits and **8 Bits**.

Parity

A parity bit can be sent along with regular data bits to detect data transmission errors. Select Even if the parity bit is set to 0, and the number of 1's in data bits is even. Select Odd if the parity bit is set to 0, and the number of 1's in data bits is odd. Select None if you do not want to send a parity bit with your data bits in transmission. Select Mark to add a mark as a parity bit to be sent along with the data bits. Select Space to add a Space as a parity bit to be sent with your data bits. The options are **None**, Even, Odd, Mark and Space.

Stop Bits

A stop bit indicates the end of a serial data packet. Select 1 Stop Bit for standard serial data communication. Select 2 Stop Bits if slower devices are used. The options are **1** and 2.

Flow Control

Use this feature to set the flow control for Console Redirection to prevent data loss caused by buffer overflow. Send a "Stop" signal to stop sending data when the receiving buffer is full. Send a "Start" signal to start sending data when the receiving buffer is empty. The options are **None** and Hardware RTS/CTS.

VT-UTF8 Combo Key Support

Select Enabled to enable VT-UTF8 Combination Key support for ANSI/VT100 terminals. The options are Disabled and **Enabled.**

WIT Company – поставка серверов, СХД, сетевого оборудования, лицензионного ПО WIT.RU

Recorder Mode

Select Enabled to capture the data displayed on a terminal and send it as text messages to a remote server. The options are **Disabled** and Enabled.

Resolution 100x31

Select Enabled for extended-terminal resolution support. The options are Disabled and **Enabled**.

Legacy OS Redirection Resolution

Use this feature to select the number of rows and columns used in Console Redirection for legacy OS support. The options are **80x24** and 80x25.

Putty KeyPad

This feature selects Function Keys and KeyPad settings for Putty, which is a terminal emulator designed for the Windows OS. The options are **VT100**, LINUX, XTERMR6, SCO, ESCN, and VT400.

Redirection After BIOS POST

Use this feature to enable or disable legacy Console Redirection after BIOS POST. When set to Bootloader, legacy Console Redirection is disabled before booting the OS. When set to Always Enable, legacy Console Redirection remains enabled when booting the OS. The options are **Always Enable** and Bootloader.

Legacy Console Redirection

Legacy Serial Redirection Port

Use this feature to select a COM port to display redirection of Legacy OS and Legacy OPROM messages. The options are **COM1** and SOL/COM2.

EMS (Emergency Management Services) Console Redirection

Select Enabled to use a COM port selected by the user for EMS Console Redirection. The options are Enabled and **Disabled.**

If the item above is set to Enabled, the following items will become available for configuration:

▶EMS Console Redirection Settings

This feature allows the user to specify how the host computer will exchange data with the client computer, which is the remote computer used by the user.

WIT Company – поставка серверов, СХД, сетевого оборудования, лицензионного ПО WIT.RU

Out-of-Band Mgmt Port

The feature selects a serial port in a client server to be used by the Microsoft Windows Emergency Management Services (EMS) to communicate with a remote host server. The options are COM1 and SOL/COM2.

Terminal Type

Use this feature to select the target terminal emulation type for Console Redirection. Select VT100 to use the ASCII character set. Select VT100+ to add color and function key support. Select ANSI to use the extended ASCII character set. Select VT-UTF8 to use UTF8 encoding to map Unicode characters into one or more bytes. The options are VT100, VT100+, **VT-UTF8**, and ANSI.

Bits Per Second

This item sets the transmission speed for a serial port used in Console Redirection. Make sure that the same speed is used in the host computer and the client computer. A lower transmission speed may be required for long and busy lines. The options are 9600, 19200, 57600, and **115200** (bits per second).

Flow Control

Use this item to set the flow control for Console Redirection to prevent data loss caused by buffer overflow. Send a "Stop" signal to stop sending data when the receiving buffer is full. Send a "Start" signal to start sending data when the receiving buffer is empty. The options are **None,** Hardware RTS/CTS, and Software Xon/Xoff.

Data Bits, Parity, Stop Bits

▶ACPI Settings

Numa

This setting **Enables** or Disables Non-Uniform Memory Access (NUMA), a feature that improves memory-to-processor communication and performance. The options are **Enabled** or Disabled.

WHEA Support

Select Enabled to support the Windows Hardware Error Architecture (WHEA) platform and provide a common infrastructure for the system to handle hardware errors within the Windows OS environment to reduce system crashes and to enhance system recovery and health monitoring. The options are Enabled and **Disabled**.

WIT Company – поставка серверов, СХД, сетевого оборудования, лицензионного ПО WIT.RU

High Precision Timer

Select Enabled to activate the High Precision Event Timer (HPET) that produces periodic interrupts at a much higher frequency than a Real-time Clock (RTC) does in synchronizing multimedia streams, providing smooth playback and reducing the dependency on other timestamp calculation devices, such as an x86 RDTSC Instruction embedded in the CPU. The High Performance Event Timer is used to replace the 8254 Programmable Interval Timer. The options are **Enabled** and Disabled.

▶Trusted Computing Configuration

Security Device Support

If this feature and the TPM jumper on the motherboard are both set to Enabled, onboard security devices will be enabled for TPM (Trusted Platform Module) support to enhance data integrity and network security. Please reboot the system for a change on this setting to take effect. The options are Disabled and **Enabled**.

▶iSCSI Configuration

iSCSI Initiator Name

This feature allows the user to enter the unique name of the iSCSI Initiator in IQN format. Once the name of the iSCSI Initiator is entered into the system, configure the proper settings for the following items.

▶Add an Attempt

▶Delete Attempts

▶Change Attempt Order

▶Intel(R) Virtual RAID on CPU

Intel(R) VROC with VMD Technology 5.0.0.1205

RAID volumes and Intel VMD Controllers information will be displayed if they are detected by the system.

WIT Company – поставка серверов, СХД, сетевого оборудования, лицензионного ПО WIT.RU

6.4 Event Logs

Use this feature to configure Event Log settings.

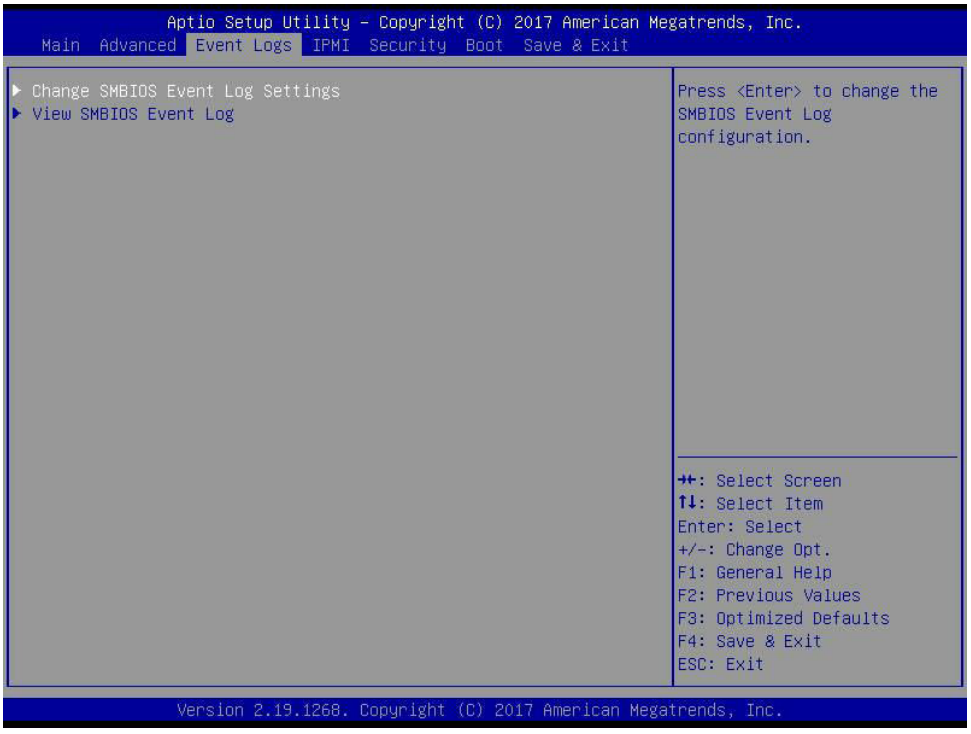

▶Change SMBIOS Event Log Settings

Enabling/Disabling Options

SMBIOS Event Log

Change this item to enable or disable all features of the SMBIOS Event Logging during system boot. The options are **Enabled** and Disabled.

Erasing Settings

Erase Event Log

If No is selected, data stored in the event log will not be erased. Select Yes, Next Reset, data in the event log will be erased upon next system reboot. Select Yes, Every Reset, data in the event log will be erased upon every system reboot. The options are **No**, Yes, Next reset, and Yes, Every reset.

When Log is Full

Select Erase Immediately for all messages to be automatically erased from the event log when the event log memory is full. The options are **Do Nothing** and Erase Immediately.

WIT Company – поставка серверов, СХД, сетевого оборудования, лицензионного ПО WIT.RU

SMBIOS Event Long Standard Settings

Log System Boot Event

This option toggles the System Boot Event logging to enabled or disabled. The options are **Disabled** and Enabled.

MECI

The Multiple Event Count Increment (MECI) counter counts the number of occurences that a duplicate event must happen before the MECI counter is incremented. This is a numeric value. The default value is **1**.

METW

The Multiple Event Time Window (METW) defines number of minutes must pass between duplicate log events before MECI is incremented. This is in minutes, from 0 to 99. The default value is **60**.

> **Note**: After making changes on a setting, be sure to reboot the system for the changes to take effect.

▶View SMBIOS Event Log

This section displays the contents of the SMBIOS Event Log.

WIT Company – поставка серверов, СХД, сетевого оборудования, лицензионного ПО WIT.RU

6.5 IPMI

Use this feature to configure Intelligent Platform Management Interface (IPMI) settings.

BMC Firmware Revision

This item indicates the IPMI firmware revision used in your system.

IPMI Status (Baseboard Management Controller)

This item indicates the status of the IPMI firmware installed in your system.

▶System Event Log

Enabling/Disabling Options

SEL Components

Select Enabled for all system event logging at bootup. The options are **Enabled** and Disabled.

Erasing Settings

Erase SEL

Select Yes, On next reset to erase all system event logs upon next system reboot. Select Yes, On every reset to erase all system event logs upon each system reboot. Select No to keep all system event logs after each system reboot. The options are **No,** Yes, On next reset, and Yes, On every reset.

WIT Company – поставка серверов, СХД, сетевого оборудования, лицензионного ПО WIT.RU

When SEL is Full

This feature allows the user to decide what the BIOS should do when the system event log is full. Select Erase Immediately to erase all events in the log when the system event log is full. The options are **Do Nothing** and Erase Immediately.

> **Note**: After making changes on a setting, be sure to reboot the system for the changes to take effect.

▶BMC Network Configuration

BMC Network Configuration

Configure IPV4 support

IPMI LAN Selection

This item displays the IPMI LAN setting. The default setting is **Failover**.

IPMI Network Link Status

This item displays the IPMI Network Link status. The default setting is **Dedicated LAN**.

Update IPMI LAN Configuration

Select Yes for the BIOS to implement all IP/MAC address changes at the next system boot. The options are No and Yes.

If the item above set to Yes, the following item will become available for user's configuration:

Configuration Address Source

This feature allows the user to select the source of the IP address for this computer. If Static is selected, you will need to know the IP address of this computer and enter it to the system manually in the field. If DHCP is selected, the BIOS will search for a DHCP (Dynamic Host Configuration Protocol) server in the network that is attached to and request the next available IP address for this computer. The options are **DHCP** and Static.

Station IP Address

This item displays the Station IP address for this computer. This should be in decimal and in dotted quad form (i.e., 192.168.10.253).

Subnet Mask

This item displays the sub-network that this computer belongs to. The value of each three-digit number separated by dots should not exceed 255.

WIT Company – поставка серверов, СХД, сетевого оборудования, лицензионного ПО WIT.RU

Station MAC Address

This item displays the Station MAC address for this computer. Mac addresses are 6 two-digit hexadecimal numbers.

Gateway IP Address

This item displays the Gateway IP address for this computer. This should be in decimal and in dotted quad form (i.e., 172.31.0.1).

VLAN

This item displays the virtual LAN settings.

Configure IPV6 Support

This section displays configuration features for IPV6 support.

LAN Channel 1

IPV6 Support

Use this feature to enable IPV6 support. The options are **Enabled** and Disabled.

Configuration Address Source

This feature allows the user to select the source of the IP address for this computer. If Static is selected, you will need to know the IP address of this computer and enter it to the system manually in the field. If DHCP is selected, the BIOS will search for a DHCP (Dynamic Host Configuration Protocol) server in the network that is attached to and request the next available IP address for this computer. The options are **Unspecified**, Static, and DHCP.

If the item "Configuration Address Source" above is set to Static, the following items will become available for configuration:

- Station IPV6 Address
- Prefix Length
- IPV6 Router1 IP Address

WIT Company – поставка серверов, СХД, сетевого оборудования, лицензионного ПО WIT.RU

6.6 Security

This menu allows the user to configure the following security settings for the system.

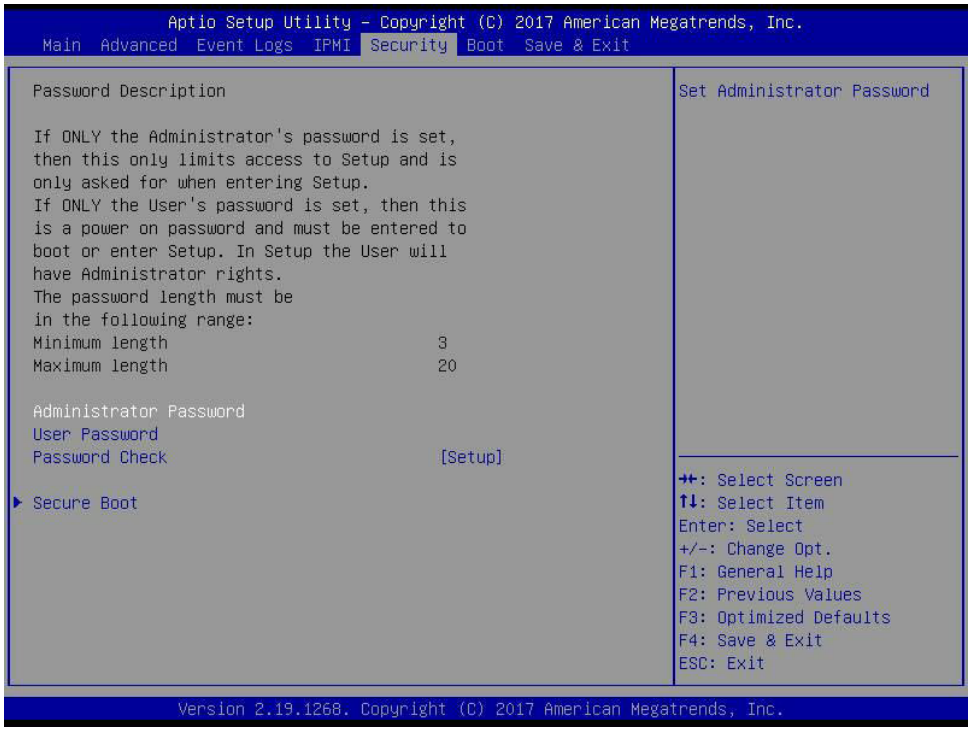

Administrator Password

Press Enter to create a new, or change an existing, Administrator password.

User Password

Press Enter to create a new, or change an existing, User password.

Password Check

Select Setup for the system to check for a password at Setup. Select Always for the system to check for a password at bootup or upon entering the BIOS Setup utility. The options are **Setup** and Always.

▶Secure Boot Menu

This section displays the contents of the following secure boot features:

- System Mode
- Secure Boot
- Vendor Keys

WIT Company – поставка серверов, СХД, сетевого оборудования, лицензионного ПО WIT.RU

Secure Boot

Use this item to enable secure boot. The options are **Disabled** and Enabled.

Secure Boot Mode

Use this item to configure Secure Boot variables without authentication. The options are Standard and **Custom**.

CSM Support

Select Enabled to support the EFI Compatibility Support Module (CSM), which provides compatibility support for traditional legacy BIOS for system boot. The options are **Enabled** and Disabled.

▶Key Management

This submenu allows the user to configure the following Key Management settings.

Provision Factory Default Keys

Select Enabled to install the default Secure-Boot keys set by the manufacturer. The options are **Disabled** and Enabled.

▶Enroll All Factory Default Keys

Select Yes to install all default secure keys set by the manufacturer. The options are **Yes** and No.

Save All Secure Boot Variables

This feature allows the user to decide if all secure boot variables should be saved.

▶Platform Key (PK)

This feature allows the user to configure the settings of the platform keys.

Set New Key

Select Yes to load the new platform keys (PK) from the manufacturer's defaults. Select No to load the platform keys from a file. The options are **Yes** and No.

▶Key Exchange Key

Set New Key

Select Yes to load the KEK from the manufacturer's defaults. Select No to load the KEK from a file. The options are Yes and No.

Append Key

Select Yes to add the KEK from the manufacturer's defaults list to the existing KEK. Select No to load the KEK from a file. The options are Yes and No.

WIT Company – поставка серверов, СХД, сетевого оборудования, лицензионного ПО WIT.RU

▶Authorized Signatures

Set New Key

Select Yes to load the database from the manufacturer's defaults. Select No to load the DB from a file. The options are Yes and No.

Append Key

Select Yes to add the database from the manufacturer's defaults to the existing DB. Select No to load the DB from a file. The options are Yes and No.

▶Forbiden Signatures

Set New Key

Select Yes to load the DBX from the manufacturer's defaults. Select No to load the DBX from a file. The options are Yes and No.

Append Key

Select Yes to add the DBX from the manufacturer's defaults to the existing DBX. Select No to load the DBX from a file. The options are Yes and No.

▶Authorized TimeStamps

Set New Key

Select Yes to load the DBT from the manufacturer's defaults. Select No to load the DBT from a file. The options are Yes and No.

Append Key

Select Yes to add the DBT from the manufacturer's defaults list to the existing DBT. Select No to load the DBT from a file. The options are Yes and No.

▶OsRecovery Signature

This item uploads and installs an OSRecovery Signature. You may insert a factory default key or load from a file. The file formats accepted are:

1) Public Key Certificate

a. EFI Signature List

b. EFI CERT X509 (DER Encoded)

c. EFI CERT RSA2048 (bin)

d. EFI SERT SHA256 (bin)

2) EFI Time Based Authenticated Variable

When prompted, select "Yes" to load Factory Defaults or "No' to load from a file.

WIT Company – поставка серверов, СХД, сетевого оборудования, лицензионного ПО WIT.RU

Delete OSRecovery Signatures

This item deletes a previously installed OS Recovery Signature.

Append OsRecovery Signature

This item uploads and adds an OSRecovery Signature into the Key Management. You may insert a factory default key or load from a file. When prompted, select "Yes" to load Factory Defaults or "No' to load from a file.

6.7 Boot

Use this feature to configure Boot Settings:

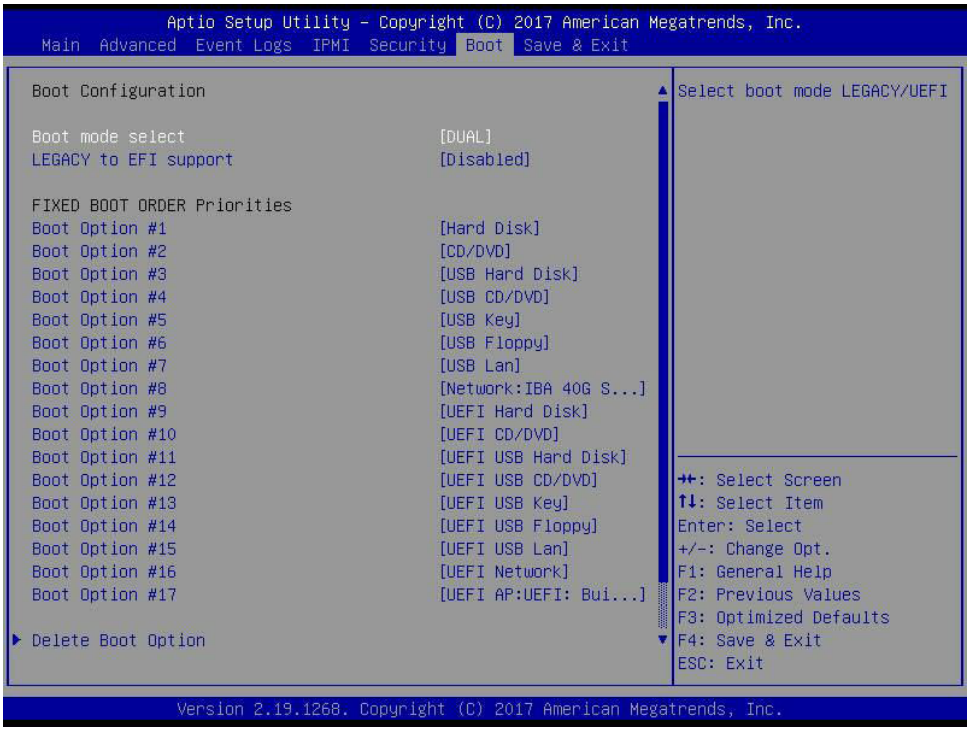

Boot Mode Select

Use this item to select the type of device that the system is going to boot from. The options are Legacy, UEFI, and **Dual.** The default setting is Dual.

Legacy to EFI Support

This feature **Enables** the system to boot to EFI OS if boot fails from Legacy boot order. The options are **Enabled** or Disabled.

Fixed Boot Order Priorities

This option prioritizes the order of bootable devices that the system to boot from. Press <Enter> on each entry from top to bottom to select devices.

If the item above set to Legacy, UEFI/Dual the following items will be displayed:

WIT Company – поставка серверов, СХД, сетевого оборудования, лицензионного ПО WIT.RU

- Legacy/UEFI/Dual/Boot Order #1
- Legacy/UEFI/Dual/Boot Order #2
- Legacy/UEFI/Dual/Boot Order #3
- Legacy/UEFI/Dual/Boot Order #4
- Legacy/UEFI/Dual/Boot Order #5
- Legacy/UEFI/Dual/Boot Order #6
- Legacy/UEFI/Dual/Boot Order #7
- Legacy/UEFI/Dual/Boot Order #8
- Legacy/UEFI/Dual/Boot Order #9
- Legacy/UEFI/Dual/Boot Order #10
- Legacy/UEFI/Dual/Boot Order #11
- Legacy/UEFI/Dual/Boot Order #12
- Legacy/UEFI/Dual/Boot Order #13
- Legacy/UEFI/Dual/Boot Order #14
- Legacy/UEFI/Dual/Boot Order #15
- Legacy/UEFI/Dual/Boot Order #16
- Legacy/UEFI/Dual/Boot Order #17

▶Delete Boot Option

Use this feature to remove a pre-defined boot device from which the system will boot during startup.

The settings are [any pre-defined boot device].

▶UEFI Application Boot Priorities

This feature allows the user to specify which UEFI devices are boot devices.

- UEFI Boot Order #1
- UEFI Boot Order #2

WIT Company – поставка серверов, СХД, сетевого оборудования, лицензионного ПО WIT.RU

▶NETWORK Drive BBS Priorities

This feature allows the user to specify which UEFI network drive devices are boot devices.

UEFI Boot Order #

6.8 Save & Exit

Select the Exit tab from the BIOS setup utility screen to enter the Exit BIOS Setup screen.

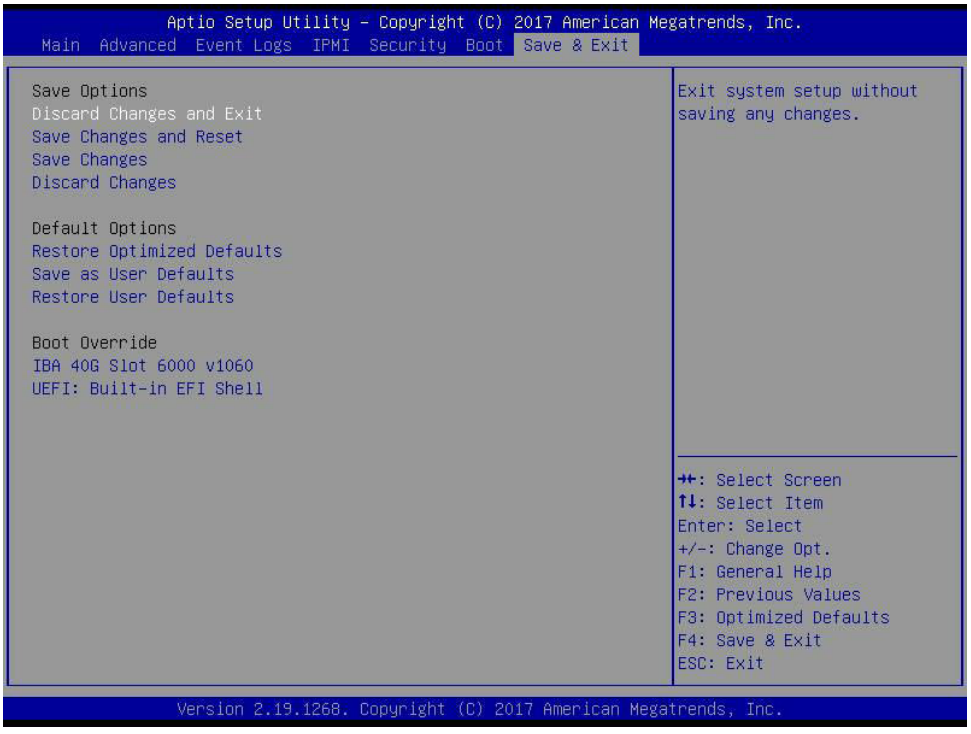

Save Options

Discard Changes and Exit

Select this option to quit the BIOS Setup without making any permanent changes to the system configuration, and reboot the computer. Select Discard Changes and Exit from the Save & Exit menu and press <Enter>.

Save Changes and Reset

After completing the system configuration changes, select this option to save the changes you have made. This will not reset (reboot) the system.

Save Changes

When you have completed the system configuration changes, select this option to leave the BIOS setup utility and reboot the computer for the new system configuration parameters to take effect. Select Save Changes from the Save & Exit menu and press <Enter>.

WIT Company – поставка серверов, СХД, сетевого оборудования, лицензионного ПО WIT.RU

Discard Changes

Select this option and press <Enter> to discard all the changes and return to the AMI BIOS utility program.

Default Options

Restore Optimized Defaults

To set this feature, select Restore Defaults from the Save & Exit menu and press <Enter>. These are factory settings designed for maximum system stability, but not for maximum performance.

Save As User Defaults

To set this feature, select Save as User Defaults from the Save & Exit menu and press <Enter>. This enables the user to save any changes to the BIOS setup for future use.

Restore User Defaults

To set this feature, select Restore User Defaults from the Save & Exit menu and press <Enter>. Use this feature to retrieve user-defined settings that were saved previously.

Boot Override

Listed in this section are other boot options for the system (i.e., Built-in EFI shell). Select an option and press <Enter>. Your system will boot to the selected boot option.

WIT Company – поставка серверов, СХД, сетевого оборудования, лицензионного ПО WIT.RU

Appendix A

BIOS Error Codes

A.1 BIOS Error POST (Beep) Codes

During the POST (Power-On Self-Test) routines, which are performed each time the system is powered on, errors may occur.

Non-fatal errors are those which, in most cases, allow the system to continue the boot-up process. The error messages normally appear on the screen.

Fatal errors are those which will not allow the system to continue the boot-up procedure. If a fatal error occurs, you should consult with your system manufacturer for possible repairs.

These fatal errors are usually communicated through a series of audible beeps. The table below lists some common errors and their corresponding beep codes encountered by users.

BIOS Beep (POST) Codes		
Beep Code	**Error Message**	**Description**
1 beep	Refresh	Circuits have been reset (Ready to power up)
5 short, 1 long	Memory error	No memory detected in system
5 short	Display memory read/write error	Video adapter missing or with faulty memory
1 long continuous	System OH	System overheat condition

WIT Company – поставка серверов, СХД, сетевого оборудования, лицензионного ПО WIT.RU

A.2 Additional BIOS POST Codes

The AMI BIOS supplies additional checkpoint codes, which are documented online at http://www.supermicro.com/support/manuals/ ("AMI BIOS POST Codes User's Guide").

When BIOS performs the Power On Self Test, it writes checkpoint codes to I/O port 0080h. If the computer cannot complete the boot process, a diagnostic card can be attached to the computer to read I/O port 0080h (Supermicro p/n AOC-LPC80-20).

For information on AMI updates, please refer to http://www.ami.com/products/.

WIT Company – поставка серверов, СХД, сетевого оборудования, лицензионного ПО WIT.RU

WIT Company – поставка серверов, СХД, сетевого оборудования, лицензионного ПО WIT.RU

Appendix B

Standardized Warning Statements for AC Systems

B.1 About Standardized Warning Statements

The following statements are industry standard warnings, provided to warn the user of situations which have the potential for bodily injury. Should you have questions or experience difficulty, contact Supermicro's Technical Support department for assistance. Only certified technicians should attempt to install or configure components.

Read this appendix in its entirety before installing or configuring components in the Supermicro chassis.

These warnings may also be found on our website at http://www.supermicro.com/about/policies/safety_information.cfm.

Warning Definition

Warning! This warning symbol means danger. You are in a situation that could cause bodily injury. Before you work on any equipment, be aware of the hazards involved with electrical circuitry and be familiar with standard practices for preventing accidents.

警告の定義

この警告サインは危険を意味します。

人身事故につながる可能性がありますので、いずれの機器でも動作させる前に、

電気回路に含まれる危険性に注意して、標準的な事故防止策に精通して下さい。

此警告符号代表危险。

您正处于可能受到严重伤害的工作环境中。在您使用设备开始工作之前，必须充分意识到触电的危险，并熟练掌握防止事故发生的标准工作程序。请根据每项警告结尾的声明号码找到此设备的安全性警告说明的翻译文本。

此警告符號代表危險。

您正處於可能身體可能會受損傷的工作環境中。在您使用任何設備之前，請注意觸電的危險，並且要熟悉預防事故發生的標準工作程序。請依照每一注意事項後的號碼找到相關的翻譯說明內容。

WIT Company – поставка серверов, СХД, сетевого оборудования, лицензионного ПО WIT.RU

Warnung

WICHTIGE SICHERHEITSHINWEISE

Dieses Warnsymbol bedeutet Gefahr. Sie befinden sich in einer Situation, die zu Verletzungen führen kann. Machen Sie sich vor der Arbeit mit Geräten mit den Gefahren elektrischer Schaltungen und den üblichen Verfahren zur Vorbeugung vor Unfällen vertraut. Suchen Sie mit der am Ende jeder Warnung angegebenen Anweisungsnummer nach der jeweiligen Übersetzung in den übersetzten Sicherheitshinweisen, die zusammen mit diesem Gerät ausgeliefert wurden.

BEWAHREN SIE DIESE HINWEISE GUT AUF.

INSTRUCCIONES IMPORTANTES DE SEGURIDAD

Este símbolo de aviso indica peligro. Existe riesgo para su integridad física. Antes de manipular cualquier equipo, considere los riesgos de la corriente eléctrica y familiarícese con los procedimientos estándar de prevención de accidentes. Al final de cada advertencia encontrará el número que le ayudará a encontrar el texto traducido en el apartado de traducciones que acompaña a este dispositivo.

GUARDE ESTAS INSTRUCCIONES.

IMPORTANTES INFORMATIONS DE SÉCURITÉ

Ce symbole d'avertissement indique un danger. Vous vous trouvez dans une situation pouvant entraîner des blessures ou des dommages corporels. Avant de travailler sur un équipement, soyez conscient des dangers liés aux circuits électriques et familiarisez-vous avec les procédures couramment utilisées pour éviter les accidents. Pour prendre connaissance des traductions des avertissements figurant dans les consignes de sécurité traduites qui accompagnent cet appareil, référez-vous au numéro de l'instruction situé à la fin de chaque avertissement.

CONSERVEZ CES INFORMATIONS.

תקנון הצהרות אזהרה

הצהרות הבאות הן אזהרות על פי תקני התעשייה, על מנת להזהיר את המשתמש מפני חבלה פיזית אפשרית. במידה ויש שאלות או היתקלות בבעיה כלשהי, יש ליצור קשר עם מחלקת תמיכה טכנית של סופרמיקרו. טכנאים מוסמכים בלבד רשאים להתקין או להגדיר את הרכיבים.

יש לקרוא את הנספח במלואו לפני התקנת או הגדרת הרכיבים במארזי סופרמיקרו.

WIT Company – поставка серверов, СХД, сетевого оборудования, лицензионного ПО WIT.RU

ا كً ف حالة وٌكي أى تتسبب ف اصابة جسد ةٌ هذا الزهز عٌ خطز !تحذ زٌ .
قبل أى تعول على أي هعذات،كي على علن بالوخاطز ال ٱجوة عي الذوائز
الكهزبائ ةٍ
وكي على درا ةٌ بالووارسات البقائ ةٍ لو عٌ وقع أي حادث
استخذم رقن الب إٍ الو صٌص ف هًا ةٌ كل تحذ زٌ للعشر تزجوتها

안전을 위한 주의사항

경고!

이 경고 기호는 위험이 있음을 알려 줍니다. 작업자의 신체에 부상을 야기 할 수 있는 상태에 있게 됩니다. 모든 장비에 대한 작업을 수행하기 전에 전기회로와 관련된 위험요소들을 확인하시고 사전에 사고를 방지할 수 있도록 표준 작업절차를 준수해 주시기 바랍니다.

해당 번역문을 찾기 위해 각 경고의 마지막 부분에 제공된 경고문 번호를 참조하십시오

BELANGRIJKE VEILIGHEIDSINSTRUCTIES

Dit waarschuwings symbool betekent gevaar. U verkeert in een situatie die lichamelijk letsel kan veroorzaken. Voordat u aan enige apparatuur gaat werken, dient u zich bewust te zijn van de bij een elektrische installatie betrokken risico's en dient u op de hoogte te zijn van de standaard procedures om ongelukken te voorkomen. Gebruik de nummers aan het eind van elke waarschuwing om deze te herleiden naar de desbetreffende locatie.

BEWAAR DEZE INSTRUCTIES

Installation Instructions

Warning! Read the installation instructions before connecting the system to the power source.

設置手順書

システムを電源に接続する前に、設置手順書をお読み下さい。

警告

将此系统连接电源前,请先阅读安装说明。

警告

將系統與電源連接前，請先閱讀安裝說明。

WIT Company – поставка серверов, СХД, сетевого оборудования, лицензионного ПО WIT.RU

Warnung

Vor dem Anschließen des Systems an die Stromquelle die Installationsanweisungen lesen.

¡Advertencia!

Lea las instrucciones de instalación antes de conectar el sistema a la red de alimentación.

Attention

Avant de brancher le système sur la source d'alimentation, consulter les directives d'installation.

יש לקרוא את הוראות התקנה לפני חיבור המערכת למקור מתח.

اقر إرشادات التركيب قبل توصيل النظام إلى مصدر للطاقة

시스템을 전원에 연결하기 전에 설치 안내를 읽어주십시오.

Waarschuwing

Raadpleeg de installatie-instructies voordat u het systeem op de voedingsbron aansluit.

Circuit Breaker

Warning! This product relies on the building's installation for short-circuit (overcurrent) protection. Ensure that the protective device is rated not greater than: 250 V, 20 A.

サーキット・ブレーカー

この製品は、短絡（過電流）保護装置がある建物での設置を前提としています。

保護装置の定格が250 V、20 Aを超えないことを確認下さい。

警告

此产品的短路(过载电流)保护由建筑物的供电系统提供,确保短路保护设备的额定电流不大于250V,20A。

警告

此產品的短路(過載電流)保護由建築物的供電系統提供,確保短路保護設備的額定電流不大於250V,20A。

WIT Company – поставка серверов, СХД, сетевого оборудования, лицензионного ПО WIT.RU

Warnung

Dieses Produkt ist darauf angewiesen, dass im Gebäude ein Kurzschluss- bzw. Überstromschutz installiert ist. Stellen Sie sicher, dass der Nennwert der Schutzvorrichtung nicht mehr als: 250 V, 20 A beträgt.

¡Advertencia!

Este equipo utiliza el sistema de protección contra cortocircuitos (o sobrecorrientes) del edificio. Asegúrese de que el dispositivo de protección no sea superior a: 250 V, 20 A.

Attention

Pour ce qui est de la protection contre les courts-circuits (surtension), ce produit dépend de l'installation électrique du local. Vérifiez que le courant nominal du dispositif de protection n'est pas supérieur à :250 V, 20 A.

מוצר זה מסתמך על הגנה המותקנת במבנים למניעת קצר חשמלי. יש לוודא כי
המכשיר המגן מפני הקצר החשמלי הוא לא יותר מ-250VDC, 20A

هذا المنتج يعتمد على معداث الحمايت مه الدوائرالقصيرة التي تم تثبيتها في
المبنى
تأكد من أن تقييم الجهاز الوقائي ليس أكثر من : 20A, 250V

경고!

이 제품은 전원의 단락(과전류)방지에 대해서 전적으로 건물의 관련 설비에 의존합니다.
보호장치의 정격이 반드시 250V(볼트), 20A(암페어)를 초과하지 않도록 해야 합니다.

Waarschuwing

Dit product is afhankelijk van de kortsluitbeveiliging (overspanning) van uw electrische installatie. Controleer of het beveiligde aparaat niet groter gedimensioneerd is dan 250V, 20A.

WIT Company – поставка серверов, СХД, сетевого оборудования, лицензионного ПО WIT.RU

Power Disconnection Warning

Warning! The system must be disconnected from all sources of power and the power cord removed from the power supply module(s) before accessing the chassis interior to install or remove system components.

電源切断の警告

システムコンポーネントの取り付けまたは取り外しのために、シャーシー内部にアクセスするには、システムの電源はすべてのソースから切断され、電源コードは電源モジュールから取り外す必要があります。

警告

在你打开机箱并安装或移除内部器件前,必须将系统完全断电,并移除电源线。

警告

在您打開機殼安裝或移除內部元件前，必須將系統完全斷電，並移除電源線。

Warnung

Das System muss von allen Quellen der Energie und vom Netzanschlusskabel getrennt sein, das von den Spg.Versorgungsteilmodulen entfernt wird, bevor es auf den Chassisinnenraum zurückgreift, um Systemsbestandteile anzubringen oder zu entfernen.

¡Advertencia!

El sistema debe ser disconnected de todas las fuentes de energía y del cable eléctrico quitado de los módulos de fuente de alimentación antes de tener acceso el interior del chasis para instalar o para quitar componentes de sistema.

Attention

Le système doit être débranché de toutes les sources de puissance ainsi que de son cordon d'alimentation secteur avant d'accéder à l'intérieur du chassis pour installer ou enlever des composants de systéme.

אזהרה מפני ניתוק חשמלי

!אזהרה

יש לנתק את המערכת מכל מקורות החשמל ויש להסיר את כבל החשמלי מהספק

.לפני גישה לחלק הפנימי של המארז לצורך התקנת או הסרת רכיבים

WIT Company – поставка серверов, СХД, сетевого оборудования, лицензионного ПО WIT.RU

يجب فصم اننظاو من جميع مصادر انطاقت وإزانت سهك انكهرباء من وحدة امداد
انطاقت قبم
انصل إنى امناطق انداخهيت نههيكم نتثبيج أو إزانت مكناث الجهاز

경고!
시스템에 부품들을 장착하거나 제거하기 위해서는 섀시 내부에 접근하기 전에 반드시 전원 공급장치로부터 연결되어있는 모든 전원과 전기코드를 분리해주어야 합니다.

Waarschuwing
Voordat u toegang neemt tot het binnenwerk van de behuizing voor het installeren of verwijderen van systeem onderdelen, dient u alle spanningsbronnen en alle stroomkabels aangesloten op de voeding(en) van de behuizing te verwijderen

Equipment Installation

Warning! Only trained and qualified personnel should be allowed to install, replace, or service this equipment.

機器の設置
トレーニングを受け認定された人だけがこの装置の設置、交換、またはサービスを許可されています。

警告
只有经过培训且具有资格的人员才能进行此设备的安装、更换和维修。

警告
只有經過受訓且具資格人員才可安裝、更換與維修此設備。

Warnung
Das Installieren, Ersetzen oder Bedienen dieser Ausrüstung sollte nur geschultem, qualifiziertem Personal gestattet werden.

¡Advertencia!
Solamente el personal calificado debe instalar, reemplazar o utilizar este equipo.

WIT Company – поставка серверов, СХД, сетевого оборудования, лицензионного ПО WIT.RU

Attention

Il est vivement recommandé de confier l'installation, le remplacement et la maintenance de ces équipements à des personnels qualifiés et expérimentés.

אזהרה!

צוות מוסמך בלבד רשאי להתקין, להחליף את הציוד או לתת שירות עבור הציוד.

والمدربيه لتزكيب واستبدال أو خدمة هذا الجهاس يجب أن يسمح فقط للمظفيه المؤهليه

경고!

훈련을 받고 공인된 기술자만이 이 장비의 설치, 교체 또는 서비스를 수행할 수 있습니다.

Waarschuwing

Deze apparatuur mag alleen worden geïnstalleerd, vervangen of hersteld door geschoold en gekwalificeerd personeel.

Restricted Area

Warning! This unit is intended for installation in restricted access areas. A restricted access area can be accessed only through the use of a special tool, lock and key, or other means of security. (This warning does not apply to workstations).

アクセス制限区域

このユニットは、アクセス制限区域に設置されることを想定しています。

アクセス制限区域は、特別なツール、鍵と錠前、その他のセキュリティの手段を用いてのみ出入りが可能です。

警告

此部件应安装在限制进出的场所，限制进出的场所指只能通过使用特殊工具、锁和钥匙或其它安全手段进出的场所。

警告

此裝置僅限安裝於進出管制區域，進出管制區域係指僅能以特殊工具、鎖頭及鑰匙或其他安全方式才能進入的區域。

WIT Company – поставка серверов, СХД, сетевого оборудования, лицензионного ПО WIT.RU

Warnung

Diese Einheit ist zur Installation in Bereichen mit beschränktem Zutritt vorgesehen. Der Zutritt zu derartigen Bereichen ist nur mit einem Spezialwerkzeug, Schloss und Schlüssel oder einer sonstigen Sicherheitsvorkehrung möglich.

¡Advertencia!

Esta unidad ha sido diseñada para instalación en áreas de acceso restringido. Sólo puede obtenerse acceso a una de estas áreas mediante la utilización de una herramienta especial, cerradura con llave u otro medio de seguridad.

Attention

Cet appareil doit être installée dans des zones d'accès réservés. L'accès à une zone d'accès réservé n'est possible qu'en utilisant un outil spécial, un mécanisme de verrouillage et une clé, ou tout autre moyen de sécurité.

אזור עם גישה מוגבלת

אזהרה!

יש להתקין את היחידה באזורים שיש בהם הגבלת גישה. הגישה ניתנת בעזרת
'כלי אבטחה בלבד)מפתח, מנעול וכד.)

تخصيص هذه انحذة نترك بُها ف مناطق محظورة تم .
،مَكن انصبل إن منطقت محظورة فقط من خلال استخذاو أداة خاصت
أو أ وس هُت أخري نلالأمما قفم ومفتاح

경고!

이 장치는 접근이 제한된 구역에 설치하도록 되어있습니다. 특수도구, 잠금 장치 및 키, 또는 기타 보안 수단을 통해서만 접근 제한 구역에 들어갈 수 있습니다.

Waarschuwing

Dit apparaat is bedoeld voor installatie in gebieden met een beperkte toegang. Toegang tot dergelijke gebieden kunnen alleen verkregen worden door gebruik te maken van speciaal gereedschap, slot en sleutel of andere veiligheidsmaatregelen.

WIT Company – поставка серверов, СХД, сетевого оборудования, лицензионного ПО WIT.RU

Battery Handling

Warning! There is the danger of explosion if the battery is replaced incorrectly. Replace the battery only with the same or equivalent type recommended by the manufacturer. Dispose of used batteries according to the manufacturer's instructions

電池の取り扱い

電池交換が正しく行われなかった場合、破裂の危険性があります。交換する電池はメーカーが推奨する型、または同等のものを使用下さい。使用済電池は製造元の指示に従って処分して下さい。

警告

电池更换不当会有爆炸危险。请只使用同类电池或制造商推荐的功能相当的电池更换原有电池。请按制造商的说明处理废旧电池。

警告

電池更換不當會有爆炸危險。請使用製造商建議之相同或功能相當的電池更換原有電池。請按照製造商的說明指示處理廢棄舊電池。

Warnung

Bei Einsetzen einer falschen Batterie besteht Explosionsgefahr. Ersetzen Sie die Batterie nur durch den gleichen oder vom Hersteller empfohlenen Batterietyp. Entsorgen Sie die benutzten Batterien nach den Anweisungen des Herstellers.

Attention

Danger d'explosion si la pile n'est pas remplacée correctement. Ne la remplacer que par une pile de type semblable ou équivalent, recommandée par le fabricant. Jeter les piles usagées conformément aux instructions du fabricant.

¡Advertencia!

Existe peligro de explosión si la batería se reemplaza de manera incorrecta. Reemplazar la batería exclusivamente con el mismo tipo o el equivalente recomendado por el fabricante. Desechar las baterías gastadas según las instrucciones del fabricante.

!אזהרה

קיימת סכנת פיצוץ של הסוללה במידה והוחלפה בדרך לא תקינה. יש להחליף
את הסוללה בסוג התואם מחברת יצרן מומלצת.
סילוק הסוללות המשומשות יש לבצע לפי הוראות היצרן.

WIT Company – поставка серверов, СХД, сетевого оборудования, лицензионного ПО WIT.RU

هناك خطر من انفجار في حالة اسحبذال البطارية بطريقة غير صحيحة فعليل
اسحبذال البطارية
فقط بنفس النبع أو ما يعادلها مما أوصث به الشرمة المصنعة
جخلص من البطاريات المسحعملة وفقا لحعليمات الشرمة الصانعة

경고!

배터리가 올바르게 교체되지 않으면 폭발의 위험이 있습니다. 기존 배터리와 동일하거나 제조사에서 권장하는 동등한 종류의 배터리로만 교체해야 합니다. 제조사의 안내에 따라 사용된 배터리를 처리하여 주십시오.

Waarschuwing

Er is ontploffingsgevaar indien de batterij verkeerd vervangen wordt. Vervang de batterij slechts met hetzelfde of een equivalent type die door de fabrikant aanbevolen wordt. Gebruikte batterijen dienen overeenkomstig fabrieksvoorschriften afgevoerd te worden.

Redundant Power Supplies

Warning! This unit might have more than one power supply connection. All connections must be removed to de-energize the unit.

冗長電源装置

このユニットは複数の電源装置が接続されている場合があります。

ユニットの電源を切るためには、すべての接続を取り外さなければなりません。

警告
此部件连接的电源可能不止一个，必须将所有电源断开才能停止给该部件供电。

警告
此裝置連接的電源可能不只一個，必須切斷所有電源才能停止對該裝置的供電。

Warnung

Dieses Gerät kann mehr als eine Stromzufuhr haben. Um sicherzustellen, dass der Einheit kein trom zugeführt wird, müssen alle Verbindungen entfernt werden.

WIT Company – поставка серверов, СХД, сетевого оборудования, лицензионного ПО WIT.RU

¡Advertencia!

Puede que esta unidad tenga más de una conexión para fuentes de alimentación. Para cortar por completo el suministro de energía, deben desconectarse todas las conexiones.

Attention

Cette unité peut avoir plus d'une connexion d'alimentation. Pour supprimer toute tension et tout courant électrique de l'unité, toutes les connexions d'alimentation doivent être débranchées.

אם קיים יותר מספק אחד

אזהרה!

ליחדה יש יותר מחיבור אחד של ספק. יש להסיר את כל החיבורים על מנת לרוקן את היחידה.

قد يكون لهذا الجهاز عدة اتصالات بوحدات امداد الطاقة .

يجب إزالة كافة الاتصالات لعسل الوحدة عن الكهرباء

경고!

이 장치에는 한 개 이상의 전원 공급 단자가 연결되어 있을 수 있습니다. 이 장치에 전원을 차단하기 위해서는 모든 연결 단자를 제거해야만 합니다.

Waarschuwing

Deze eenheid kan meer dan één stroomtoevoeraansluiting bevatten. Alle aansluitingen dienen verwijderd te worden om het apparaat stroomloos te maken.

WIT Company – поставка серверов, СХД, сетевого оборудования, лицензионного ПО WIT.RU

Backplane Voltage

Warning! Hazardous voltage or energy is present on the backplane when the system is operating. Use caution when servicing.

バックプレーンの電圧

システムの稼働中は危険な電圧または電力が、バックプレーン上にかかっています。

修理する際には注意ください。

警告
当系统正在进行时，背板上有很危险的电压或能量，进行维修时务必小心。

警告
當系統正在進行時，背板上有危險的電壓或能量，進行維修時務必小心。

Warnung

Wenn das System in Betrieb ist, treten auf der Rückwandplatine gefährliche Spannungen oder Energien auf. Vorsicht bei der Wartung.

¡Advertencia!

Cuando el sistema está en funcionamiento, el voltaje del plano trasero es peligroso. Tenga cuidado cuando lo revise.

Attention

Lorsque le système est en fonctionnement, des tensions électriques circulent sur le fond de panier. Prendre des précautions lors de la maintenance.

מתח בפנל האחורי

אזהרה!

קיימת סכנת מתח בפנל האחורי בזמן תפעול המערכת. יש להיזהר במהלך העבודה.

WIT Company – поставка серверов, СХД, сетевого оборудования, лицензионного ПО WIT.RU

هناك خطر مه التيار الكهزبائي أوالطاقة المجبدة على اللحة
عندما يكن النظام يعمل كه حذرا عند خدمة هذا الجهاس

경고!
시스템이 동작 중일 때 후면판 (Backplane)에는 위험한 전압이나 에너지가 발생 합니다. 서비스 작업 시 주의하십시오.

Waarschuwing
Een gevaarlijke spanning of energie is aanwezig op de backplane wanneer het systeem in gebruik is. Voorzichtigheid is geboden tijdens het onderhoud.

Comply with Local and National Electrical Codes

Warning! Installation of the equipment must comply with local and national electrical codes.

地方および国の電気規格に準拠

機器の取り付けはその地方および国の電気規格に準拠する必要があります。

警告
设备安装必须符合本地与本国电气法规。

警告
設備安裝必須符合本地與本國電氣法規。

Warnung
Die Installation der Geräte muss den Sicherheitsstandards entsprechen.

¡Advertencia!
La instalacion del equipo debe cumplir con las normas de electricidad locales y nacionales.

Attention
L'équipement doit être installé conformément aux normes électriques nationales et locales.

WIT Company – поставка серверов, СХД, сетевого оборудования, лицензионного ПО WIT.RU

תיאום חוקי החשמל הארצי
אזהרה!
התקנת הציוד חייבת להיות תואמת לחוקי החשמל המקומיים והארציים.

تركيب المعدات الكهربائية يجب أن يمتثل للقاويه المحلية والبطية المتعلقة
بالكهرباء

경고!
현 지역 및 국가의 전기 규정에 따라 장비를 설치해야 합니다.

Waarschuwing
Bij installatie van de apparatuur moet worden voldaan aan de lokale en nationale elektriciteitsvoorschriften.

Product Disposal

Warning! Ultimate disposal of this product should be handled according to all national laws and regulations.

製品の廃棄
この製品を廃棄処分する場合、国の関係する全ての法律・条例に従い処理する必要があります。

警告
本产品的废弃处理应根据所有国家的法律和规章进行。

警告
本產品的廢棄處理應根據所有國家的法律和規章進行。

Warnung
Die Entsorgung dieses Produkts sollte gemäß allen Bestimmungen und Gesetzen des Landes erfolgen.

¡Advertencia!
Al deshacerse por completo de este producto debe seguir todas las leyes y reglamentos nacionales.

WIT Company – поставка серверов, СХД, сетевого оборудования, лицензионного ПО WIT.RU

Attention

La mise au rebut ou le recyclage de ce produit sont généralement soumis à des lois et/ou directives de respect de l'environnement. Renseignez-vous auprès de l'organisme compétent.

סילוק המוצר

אזהרה!

סילוק סופי של מוצר זה חייב להיות בהתאם להנחיות וחוקי המדינה.

التخلص النهائي من هذا المنتج ينبغي التعامل معه وفقا لجميع القانين واللائح البطنية عند

경고!

이 제품은 해당 국가의 관련 법규 및 규정에 따라 폐기되어야 합니다.

Waarschuwing

De uiteindelijke verwijdering van dit product dient te geschieden in overeenstemming met alle nationale wetten en reglementen.

Hot Swap Fan Warning

Warning! Hazardous moving parts. Keep away from moving fan blades. The fans might still be turning when you remove the fan assembly from the chassis. Keep fingers, screwdrivers, and other objects away from the openings in the fan assembly's housing.

ファン・ホットスワップの警告

警告!回転部品に注意。運転中は回転部(羽根)に触れないでください。シャーシから冷却ファン装置を取り外した際、ファンがまだ回転している可能性があります。ファンの開口部に、指、ドライバー、およびその他のものを近づけないで下さい。

警告!

警告！危险的可移动性零件。请务必与转动的风扇叶片保持距离。 当您从机架移除风扇装置，风扇可能仍在转动。小心不要将手指、螺丝起子和其他物品太靠近风扇

警告

危險的可移動性零件。請務必與轉動的風扇葉片保持距離。 當您從機架移除風扇裝置，風扇可能仍在轉動。小心不要將手指、螺絲起子和其他物品太靠近風扇。

WIT Company – поставка серверов, СХД, сетевого оборудования, лицензионного ПО WIT.RU

Warnung

Gefährlich Bewegende Teile. Von den bewegenden Lüfterblätter fern halten. Die Lüfter drehen sich u. U. noch, wenn die Lüfterbaugruppe aus dem Chassis genommen wird. Halten Sie Finger, Schraubendreher und andere Gegenstände von den Öffnungen des Lüftergehäuses entfernt.

¡Advertencia!

Riesgo de piezas móviles. Mantener alejado de las aspas del ventilador. Los ventiladores podran dar vuelta cuando usted quite ell montaje del ventilador del chasis. Mandtenga los dedos, los destornilladores y todos los objetos lejos de las aberturas del ventilador

Attention

Pieces mobiles dangereuses. Se tenir a l'ecart des lames du ventilateur Il est possible que les ventilateurs soient toujours en rotation lorsque vous retirerez le bloc ventilateur du châssis. Prenez garde à ce que doigts, tournevis et autres objets soient éloignés du logement du bloc ventilateur.

אזהרה!

חלקים נעים מסוכנים. התרחק מלהבי המאוורר בפעולהכאשר מסירים את חלקי
המאוורר מהמארז, יתכן והמאוררים עדיין עובדים. יש להרחיק למרחק בטוח את
האצבעות וכלי עבודה שונים מהפתחים בתוך המאוורר

تحذير! أجزاء متحركة خطرة. ابتعد عن شفرات المروحة المتحركة.من الممكن أن
المراوح لا تزال تدورعند إزالة كتلة المروحة من الهيكل يجب إبقاء الأصابع
.ومفكات البراغي وغيرها من الأشياء بعيدا عن الفتحات في كتلة المروحة

경고!

움직이는 위험한 부품. 회전하는 송풍 날개에 접근하지 마세요. 섀시로부터 팬 조립품을 제거할 때 팬은 여전히 회전하고 있을 수 있습니다. 팬 조림품 외관의 열려있는 부분들로부터 손가락 및 스크류드라이버, 다른 물체들이 가까이 하지 않도록 배치해 주십시오.

Waarschuwing

Gevaarlijk bewegende onderdelen. Houd voldoende afstand tot de bewegende ventilatorbladen. Het is mogelijk dat de ventilator nog draait tijdens het verwijderen van het ventilatorsamenstel uit het chassis. Houd uw vingers, schroevendraaiers en eventuele andere voorwerpen uit de buurt van de openingen in de ventilatorbehuizing.

WIT Company – поставка серверов, СХД, сетевого оборудования, лицензионного ПО WIT.RU

Power Cable and AC Adapter

Warning! When installing the product, use the provided or designated connection cables, power cables and AC adaptors. Using any other cables and adaptors could cause a malfunction or a fire. Electrical Appliance and Material Safety Law prohibits the use of UL or CSA -certified cables (that have UL/CSA shown on the code) for any other electrical devices than products designated by Supermicro only.

電源コードとACアダプター

製品を設置する場合、提供または指定および購入された接続ケーブル、電源コードとACアダプターを 該当する地域の条例や安全基準に適合するコードサイズやプラグと共に使用下さい。他のケーブルやアダプタを使用すると故障や火災の原因になることがあります。

電気用品安全法は、ULまたはCSA認定のケーブル(UL/CSEマークがコードに表記)を Supermicroが指定する製品以外に使用することを禁止しています。

警告

安装此产品时,请使用本身提供的或指定的或采购的连接线,电源线和电源适配器，包含遵照当地法规和安全要求的合规的电源线尺寸和插头.使用其它线材或适配器可能会引起故障或火灾。除了Supermicro所指定的产品,电气用品和材料安全法律规定禁止
使用未经UL或CSA认证的线材。(线材上会显示UL/CSA符号)。

警告

安裝此產品時,請使用本身提供的或指定的或採購的連接線,電源線和電源適配器，包含遵照當地法規和安全要求的合規的電源線尺寸和插頭.使用其它線材或適配器可能會引起故障或火災。除了Supermicro所指定的產品,電氣用品和材料安全法律規定禁止
使用未經UL或CSA認證的線材。 (線材上會顯示UL/CSA符號)。

Warnung

Nutzen Sie beim Installieren des Produkts ausschließlich die von uns zur Verfügung gestellten Verbindungskabeln, Stromkabeln und/oder Adapater, die Ihre örtlichen Sicherheitsstandards einhalten. Der Gebrauch von anderen Kabeln und Adapter können Fehlfunktionen oder Feuer verursachen. Die Richtlinien untersagen das Nutzen von UL oder CAS zertifizierten Kabeln (mit UL/CSA gekennzeichnet), an Geräten oder Produkten die nicht mit Supermicro gekennzeichnet sind.

WIT Company – поставка серверов, СХД, сетевого оборудования, лицензионного ПО WIT.RU

¡Advertencia!

Cuando instale el producto, utilice la conexión provista o designada o procure cables, Cables de alimentación y adaptadores de CA que cumplan con los códigos locales y los requisitos de seguridad, incluyendo el tamaño adecuado del cable y el enchufe. El uso de otros cables y adaptadores podría causar un mal funcionamiento o un incendio. La Ley de Seguridad de Aparatos Eléctricos y de Materiales prohíbe El uso de cables certificados por UL o CSA (que tienen el certificado UL / CSA en el código) para cualquier otros dispositivos eléctricos que los productos designados únicamente por Supermicro.

Attention

Lors de l'installation du produit, utilisez les cables de connection fournis ou désigné ou achetez des cables, cables de puissance et adaptateurs respectant les normes locales et les conditions de securite y compris les tailles de cables et les prises electriques appropries. L'utilisation d'autres cables et adaptateurs peut provoquer un dysfonctionnement ou un incendie. Appareils électroménagers et la Loi sur la Sécurité Matériel interdit l'utilisation de câbles certifies- UL ou CSA (qui ont UL ou CSA indiqué sur le code) pour tous les autres appareils électriques sauf les produits désignés par Supermicro seulement.

AC כבלים חשמליים ומתאמי

!אזהרה

אשר נרכשו או הותאמו לצורך ההתקנה, ואשר הותאמו לדרישות AC כאשר מתקינים את המוצר, יש להשתמש בכבלים, ספקים ומתאמים הבטיחות המקומיות, כולל מידה נכונה של הכבל והתקע . שימוש בכל כבל או מתאם מסוג אחר, עלול לגרום לתקלה או קצר חשמלי. בהתאם כאשר מופיע עליהם קוד) CSA-או ב UL -לחוקי השימוש במכשירי החשמל וחוקי הבטיחות, קיים איסור להשתמש בכבלים המוסמכים ב בלבד Supermicro עבור כל מוצר חשמלי אחר, אלא רק במוצר אשר הותאם ע"י UL/CSA) של.

عند تركيب المنتج، قم باستخدام التوصيلات المتوفرة أو المحددة أو قم بشراء الكابلات الكهربائية ومحولات التيار المتردد مع الالتزام بقوانين ومتطلبات السلامة المحلية بما في ذلك حجم الموصل والقابس السليم. استخدام أي كابلات ومحولات أخرى قد يتسبب في عطل أو حريق. يحظر قانون السلامة للأجهزة الكهربائية والمعدات استخدام الكابلات المعتمدة Supermicro. مع أي معدات أخرى غير المنتجات المعنية والمحددة من قبل (UL/CSA) والتي تحمل علامة CSA أو UL من قبل

WIT Company – поставка серверов, СХД, сетевого оборудования, лицензионного ПО WIT.RU

전원 케이블 및 AC 어댑터

경고! 제품을 설치할 때 현지 코드 및 적절한 굵기의 코드와 플러그를 포함한 안전 요구 사항을 준수하여 제공되거나 지정된 연결 혹은 구매 케이블, 전원 케이블 및 AC 어댑터를 사용하십시오.

다른 케이블이나 어댑터를 사용하면 오작동이나 화재가 발생할 수 있습니다. 전기 용품 안전법은 UL 또는 CSA 인증 케이블 (코드에 UL / CSA가 표시된 케이블)을 Supermicro 가 지정한 제품 이외의 전기 장치에 사용하는 것을 금지합니다.

Stroomkabel en AC-Adapter

Waarschuwing! Bij het aansluiten van het Product uitsluitend gebruik maken van de geleverde Kabels of een andere geschikte aan te schaffen Aansluitmethode, deze moet altijd voldoen aan de lokale voorschriften en veiligheidsnormen, inclusief de juiste kabeldikte en stekker. Het gebruik van niet geschikte Kabels en/of Adapters kan een storing of brand veroorzaken. Wetgeving voor Elektrische apparatuur en Materiaalveiligheid verbied het gebruik van UL of CSA -gecertificeerde Kabels (met UL/CSA in de code) voor elke andere toepassing dan de door Supermicro hiervoor beoogde Producten.

WIT Company – поставка серверов, СХД, сетевого оборудования, лицензионного ПО WIT.RU

Appendix C

System Specifications

Processors

Dual Intel Xeon 81xx/61xx/51xx/41xx/31xx series or 82xx/62xx/52xx/42xx/32xx series processors in a Socket P type socket
Note: Please refer to the motherboard specifications pages on our website for updates to supported processors. (support for CPUs with a TDP of 70-140W)

Chipset

Intel C621 chipset

BIOS

256 Mb AMI® Flash EEPROM

Memory

Up to 2TB 3DS ECC RDIMM/LRDIMM to speeds of DDR4-2933MHz in 8 DIMM slots (82xx/62xx series processors)
Up to 1TB 3DS ECC RDIMM/LRDIMM to speeds of DDR4-2666MHz, in 8 DIMM slots (81xx/61xx/51xx/41xx/31xx series processors)

SATA Controller

On-chip (Intel C621) controller

Drive Bays

Eight 2.5" hot-swap drive bays for SATA drives

PCI Expansion Slots (supported)

One PCI-Express 3.0 x8 slot (supported by CPU1)

Motherboard

X11DPL-i; ATX form factor (12.07 x 10.15 in. / 307 x 258 mm.)

Chassis

SC113MFTS-605CBP/R804CBP; 1U Rackmount, 17.2 x 1.7 x 19.98 in. / 437 x 43 x 508 mm. (W x H x D)

System Cooling

Four 4-cm PWM fans

Power Supply

1029P-MT: PWS-605P-1H
AC Input Voltages: 100-240 VAC
Rated Input Current: 7.5
Rated Input Frequency: 50-60 Hz
Rated Output Power: 600W
Rated Output Voltages: +5V (18A), +3.3V (15A), +12V (49A), -12V (0.5A), +5Vsb (3A)
1029P-MTR: PWS-804P-1R
AC Input Voltages: 100-240VAC
Rated Input Current: 10A max. at 100-127VAC, 5.5A max. at 200-240VAC
Rated Input Frequency: 50-60Hz
Rated Output Power: 800W
Rated Output Voltages: +12V (62.5A at 100-127VAC, 66.6A at 200-240VAC), +5Vsb (4A)

Operating Environment

Operating Temperature: 10° to 35° C (50° to 95° F)
Non-operating Temperature: -40° to 60° C (-40° to 140° F)
Operating Relative Humidity: 8% to 90% (non-condensing)
Non-operating Relative Humidity: 5% to 95% (non-condensing)

WIT Company – поставка серверов, СХД, сетевого оборудования, лицензионного ПО WIT.RU

Regulatory Compliance

Electromagnetic Emissions: FCC Class A, EN 55032 Class A, EN 61000-3-2/3-3, CISPR 32 Class A
Electromagnetic Immunity: EN 55024/CISPR 24, (EN 61000-4-2, EN 61000-4-3, EN 61000-4-4, EN 61000-4-5, EN 61000-4-6, EN 61000-4-8, EN 61000-4-11)
Safety: CSA/EN/IEC/UL 60950-1 Compliant, UL or CSA Listed (USA and Canada), CE Marking (Europe)
Other: VCCI-CISPR 32 and AS/NZS CISPR 32
Environmental: Directive 2011/65/EU, Delegated Directive (EU) 2015/863 and Directive 2012/19/EU

Perchlorate Warning

California Best Management Practices Regulations for Perchlorate Materials: This Perchlorate warning applies only to products containing CR (Manganese Dioxide) Lithium coin cells. “Perchlorate Material-special handling may apply. See www.dtsc.ca.gov/hazardouswaste/perchlorate”

WIT Company – поставка серверов, СХД, сетевого оборудования, лицензионного ПО WIT.RU